Deutsches Institut für Bautechnik DIBt

Member of EOTA
www.eota.eu

Approval body for construction products and types of construction

Bautechnisches Prüfamt

An institution established by the Federal and Laender Governments

Designated according to Article 29 of Regulation (EU) No 305/2011 and member of EOTA (European Organisation for Technical Assessment)

European Technical Assessment

ETA-15/0539 of 27 August 2015

English translation prepared by DIBt - Original version in German language

General Part

Technical Assessment Body issuing the European Technical Assessment:	Deutsches Institut für Bautechnik
Trade name of the construction product	Rebar connection with fischer FIS VL
Product family to which the construction product belongs	Post-installed rebar connection with injection mortar fischer FIS VL
Manufacturer	fischerwerke GmbH & Co. KG Klaus-Fischer-Straße 1 72178 Waldachtal DEUTSCHLAND
Manufacturing plant	fischerwerke
This European Technical Assessment contains	17 pages including 3 annexes which form an integral part of this assessment
This European Technical Assessment is issued in accordance with Regulation (EU) No 305/2011, on the basis of	Guideline for European technical approval of "Metal anchors for use in concrete", ETAG 001 Part 5: "Bonded anchors", April 2013, used as European Assessment Document (EAD) according to Article 66 Paragraph 3 of Regulation (EU) No 305/2011.

electronic copy of the eta by dibt: eta-15/0539

Deutsches Institut für Bautechnik
Kolonnenstraße 30 B | 10829 Berlin | GERMANY | Phone: +49 30 78730-0 | Fax: +49 30 78730-320 | Email: dibt@dibt.de | www.dibt.de

The European Technical Assessment is issued by the Technical Assessment Body in its official language. Translations of this European Technical Assessment in other languages shall fully correspond to the original issued document and shall be identified as such.

Communication of this European Technical Assessment, including transmission by electronic means, shall be in full. However, partial reproduction may only be made with the written consent of the issuing Technical Assessment Body. Any partial reproduction shall be identified as such.

This European Technical Assessment may be withdrawn by the issuing Technical Assessment Body, in particular pursuant to information by the Commission in accordance with Article 25(3) of Regulation (EU) No 305/2011.

electronic copy of the eta by dibt: eta-15/0539

Specific Part

1 Technical description of the product

The subject of this approval is the post-installed connection, by anchoring or overlap connection joint, of reinforcing bars (rebars) in existing structures made of normal weight concrete, using the injection mortar fischer FIS VL in accordance with the regulations for reinforced concrete construction.

Reinforcing bars made of steel with a diameter ϕ from 10 to 25 mm and injection mortar FIS VL are used for rebar connections. The steel element is placed into a drilled hole filled with injection mortar and is anchored via the bond between embedded element, injection mortar and concrete.

The product description is given in Annex A.

2 Specification of the intended use in accordance with the applicable European Assessment Document

The performances given in Section 3 are only valid if the rebar connection is used in compliance with the specifications and conditions given in Annex B.

The verifications and assessment methods on which this European Technical Assessment is based lead to the assumption of a working life of the anchor of at least 50 years. The indications given on the working life cannot be interpreted as a guarantee given by the producer, but are to be regarded only as a means for choosing the right products in relation to the expected economically reasonable working life of the works.

3 Performance of the product and references to the methods used for its assessment

3.1 Mechanical resistance and stability (BWR 1)

Essential characteristic	Performance
Design values of the ultimate bond resistance	See Annex C 1

3.2 Safety in case of fire (BWR 2)

Essential characteristic	Performance
Reaction to fire	Rebar connections satisfy requirements for Class A1
Resistance to fire	No performance assessed

3.3 Hygiene, health and the environment (BWR 3)

Regarding dangerous substances there may be requirements (e.g. transposed European legislation and national laws, regulations and administrative provisions) applicable to the products falling within the scope of this European Technical Assessment. In order to meet the provisions of Regulation (EU) No 305/2011, these requirements need also to be complied with, when and where they apply.

3.4 Safety in use (BWR 4)

The essential characteristics regarding Safety in use are included under the Basic Works Requirement Mechanical resistance and stability.

electronic copy of the eta by dibt: eta-15/0539

4 Assessment and verification of constancy of performance (AVCP) system applied, with reference to its legal base

In accordance with guideline for European technical approval ETAG 001, April 2013 used as European Assessment Document (EAD) according to Article 66 Paragraph 3 of Regulation (EU) No 305/2011 the applicable European legal act is: [96/582/EC].

The system to be applied is: 1

5 Technical details necessary for the implementation of the AVCP system, as provided for in the applicable EAD

Technical details necessary for the implementation of the AVCP system are laid down in the control plan deposited with Deutsches Institut für Bautechnik.

Issued in Berlin on 27 August 2015 by Deutsches Institut für Bautechnik

Uwe Bender
Head of Department

beglaubigt:
Baderschneider

electronic copy of the eta by dibt: eta-15/0539

Installation anchor

Figure A1:
Overlap joint with existing reinforcement for rebar connections of slabs and beams

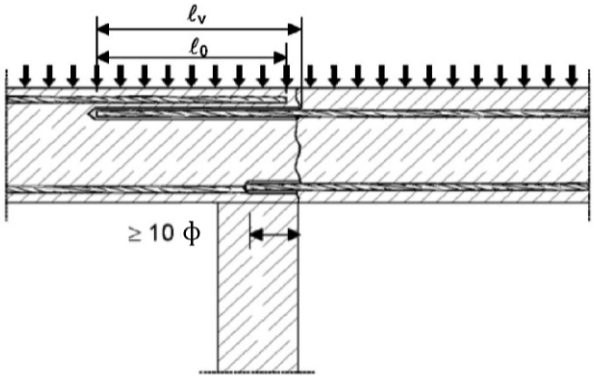

Figure A2:
Overlap joint with existing reinforcement at a foundation of a column or wall where the rebars are stressed

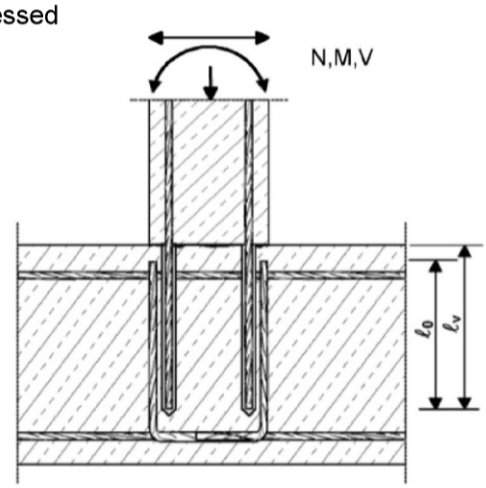

Figure A3:
End anchoring of slabs of beams (e.g. designed as simply supported)

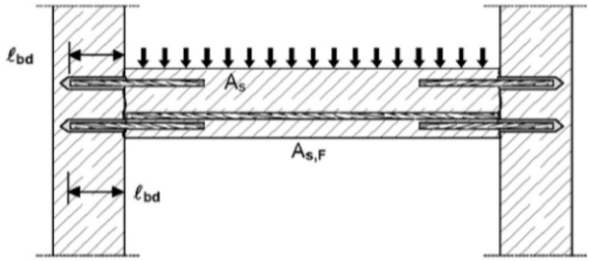

Figure A4:
Rebar connection for stressed primarily in compression

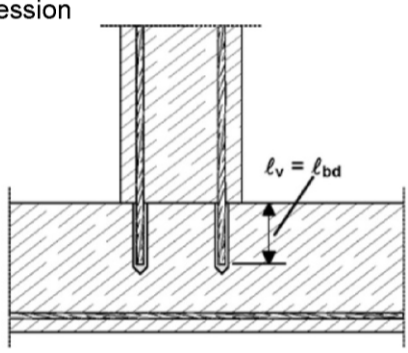

Figure A5:
Anchoring of reinforcement to cover the enveloped line of acting tensile force in the bending member

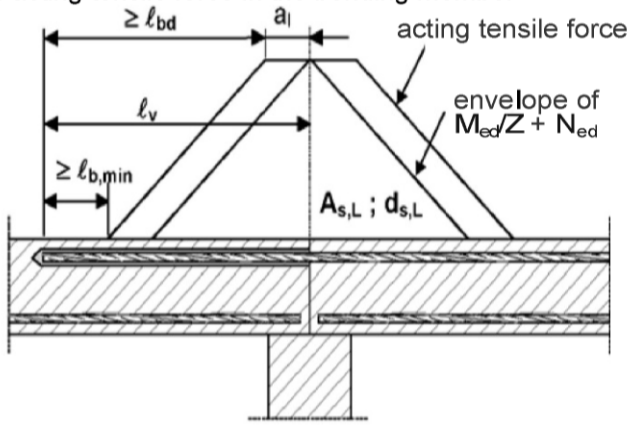

Note to **Figure A1** to **A5**

In the Figures no traverse reinforcement is plotted, the transverse reinforcement shall comply with EN 1992-1-1:2004+AC:2010.

Preparing of joints according to **Annex B 2**

electronic copy of the eta by dibt: eta-15/0539

Rebar connection with fischer FIS VL

Product description
Installed condition and examples of use for rebars

Annex A 1

Injection cartridge fischer FIS VL

Shuttle cartridge, sizes:345 ml, 360 ml; 390 ml, 950 ml, 1500 ml

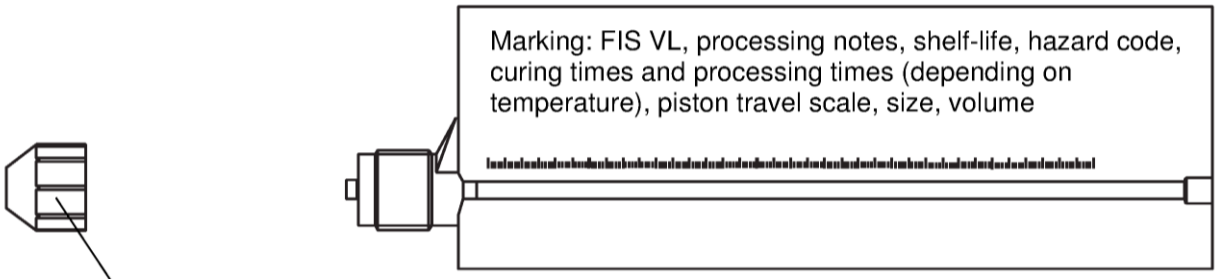

Sealing cap

Coaxial cartridge, sizes: 300 ml, 380 ml, 400 ml, 410 ml

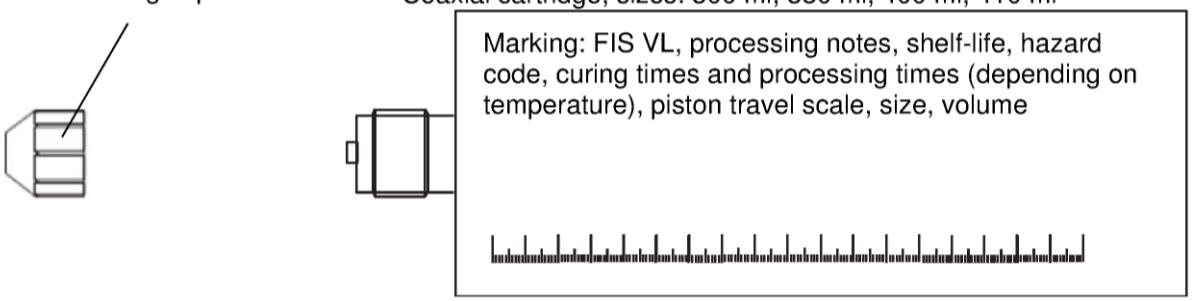

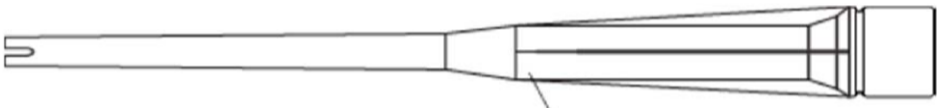

Static mixer FIS MR or static mixer FIS ME

Reinforcing bar (rebar) ϕ 10, ϕ 12, ϕ 14, ϕ 16, ϕ 20, ϕ 25

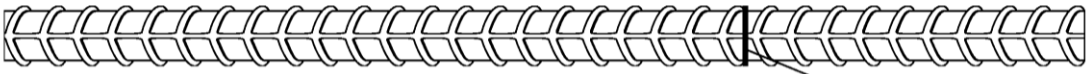

marking setting depth

electronic copy of the eta by dibt: eta-15/0539

Rebar connection with fischer FIS VL	**Annex A 2**
Product description Injection mortar; reinforcing bar	

Figure A9: Properties of reinforcing bars (rebar)

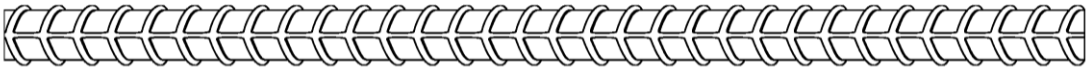

- The minimum value of related rip area $f_{R,min}$ according to EN 1992-1-1:2004+AC:2010
- The maximum outer rebar diameter over the rips shall be:
  - The nominal diameter of the rip $\phi + 2 * h$ ($h \leq 0{,}07 * \phi$)
  - (ϕ: Nominal diameter of the bar; h: rip height of the bar)

Table A1: Materials of rebars

Designation	Reinforcing bar (rebar)
Reinforcing bar EN 1992-1-1:2004+AC:2010, Annex C	Bars and de-coiled rods class B or C with f_{yk} and k according to NDP or NCL of EN 1992-1-1/NA:2013 $f_{uk} = f_{tk} = k \cdot f_{yk}$

electronic copy of the eta by dibt: eta-15/0539

Specifications of intended use

Anchorages subject to:

Static and quasi-static loads

Base materials:

- Reinforced or unreinforced normal weight concrete according to EN 206:2013
  Strength classes C20/25 to C35/45 according to EN 206:2013
- Maximum chloride concrete of 0,40% (CL 0.40) related to the cement content according to EN 206-1:2013
- Non-carbonated concrete
  Note: In case of a carbonated surface of the existing concrete structure the carbonated layer shall be removed in the area of the post-installed rebar connection with a diameter of ϕ + 60 mm prior to the installation of the new rebar
  The depth of concrete to be removed shall correspond to at least the minimum concrete cover in accordance with EN 1992-1-1:2004+AC:2010
  The foregoing may be neglected if building components are new and not carbonated and if building components are in dry conditions

Temperature Range:

- -40°C to +80°C (max. short term temperature +80°C and max long term temperature +50°C)

Design:

- Anchorages are designed under the responsibility of an engineer experienced in anchorages and concrete work
- Verifiable calculation notes and drawings are prepared taking account of the forces to be transmitted
- Design according to EN 1992-1-1:2004+AC:2010 and Annex B 2 and Annex B3
- The actual position of the reinforcement in the existing structure shall be determined on the basis of the construction documentation and taken into account when designing

Installation:

- Dry or wet concrete
- It must not be installed in flooded holes
- Overhead installation allowed
- Hole drilling by hammerdrill or compressed airdrill mode
- The installation of post-installed rebar shall be done only by suitable trained installer and under Supervision on site; the conditions under which an installer may be considered as suitable trained and the conditions for Supervision on site are up to the Member States in which the installation is done
- Check the position of the existing rebars (if the position of existing rebars is not known, it shall be determined using a rebar detector suitable for this purpose as well as on the basis of the construction documentation and then marked on the building component for the overlap joint)

electronic copy of the eta by dibt: eta-15/0539

Figure B1: General construction rules for post-installed rebars

- Only tension forces in the axis of the rebar may be transmitted
- The transfer of shear forces between new concrete and existing structure shall be designed additionally according to EN 1992-1-1:2004+AC:2010
- The joints for concreting must be roughened to at least such an extent that aggregate protrude

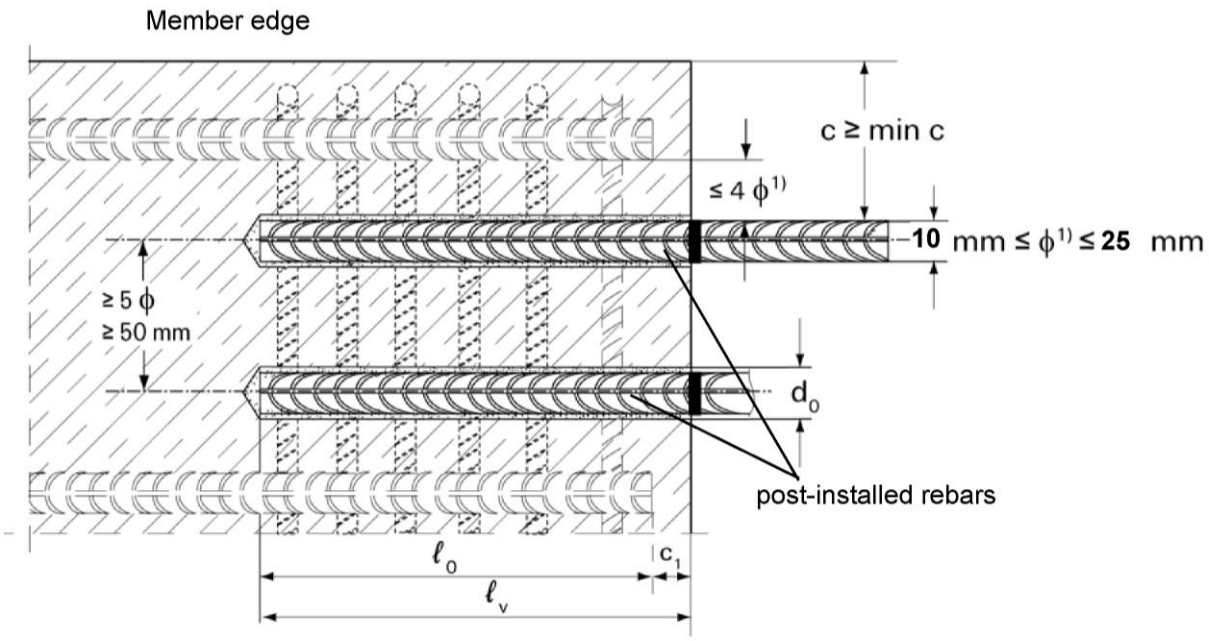

[1] If the clear distance between lapped bars exceeds 4 ϕ then the lap length shall be increased by the difference between the clear bar distance and 4 ϕ

c	concrete cover of post-installed rebar
c_1	concrete cover at end-face of existing rebar
min c	minimum concrete cover according to Table B1 and to EN 1992-1-1:2004+AC:2010, Section 4.4.1.2
ϕ	nominal diameter of the bar
ℓ_0	lap length, according to EN 1992-1-1:2004+AC:2010, Section 8.7.3
ℓ_v	effective embedment depth, $\geq \ell_0 + c_1$
d_0	nominal drill bit diameter, see Annex B4

electronic copy of the eta by dibt: eta-15/0539

Rebar connection with fischer FIS VL

Intended use
General construction rules for post-installed rebars

Annex B 2

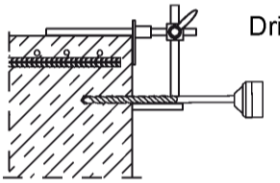

Table B1:
Minimum concrete cover c[1] depending of the drilling method and the drilling tolerance

Drilling method	Nominal diameter of the bar ϕ [mm]	Minimum concrete cover min c	
		Without drilling aid [mm]	With drilling aid [mm]
Hammer drilling	≤ 20	30 mm + 0,06 ℓ_v	30 mm + 0,02 ℓ_v ≥ 2 ϕ
	≥ 25	40 mm + 0,06 ℓ_v	40 mm + 0,02 ℓ_v ≥ 2 ϕ
Compressed air drilling	≤ 20	50 mm + 0,08 ℓ_v	50 mm + 0,02 ℓ_v
	≥ 25	60 mm + 0,08 ℓ_v	60 mm + 0,02 ℓ_v

[1] See Annex B2, Figure B1
Note: The minimum concrete cover as specified in EN 1992-1-1:2004+AC:2010 must be observed

Table B2:
Dispensers and cartridge sizes correspondending to maximum embedment depth $\ell_{v,max}$

Rebar	Manuel dispenser	Accu und pneumatic dispenser (small)	pneumatic dispenser (great)
	Cartridge size		
	< 500 ml;		>500 ml
ϕ [mm]	$\ell_{v,max}$ / $\ell_{e,ges,max}$ [mm]		$\ell_{v,max}$ / $\ell_{e,ges,max}$ [mm]
10	1000	1000	1800
12		1200	
14			
16		1500	
20	700	1300	
25		1000	2000

Table B3: Working times t_{work} and curing times t_{cure}

Temperature in the anchorage base [°C]	Maximum working times [1] t_{work} [minutes]	Minimum curing times [2] t_{cure} [minutes]
>±0 to +5	13 [3]	180
>+5 to +10	9 [3]	90
>+10 to +20	5	60
>+20 to +30	4	45
>+30 to +40	2 [4]	35

[1] Maximum time from the beginning of the injection to rebar setting and positioning
[2] For wet concrete the curing time must be doubled
[3] If the temperature in the concrete falls below 0°C the cartridge has to be warmed up to +15°C.
[4] If temperatures exceed 30 °C, cool the cartridge to +15°C…+20°C

electronic copy of the eta by dibt: eta-15/0539

Table B4:
Installation tools for drilling and cleaning the bore hole and injection of the mortar

Rebar ϕ [mm]	Drilling and cleaning							Injection		
	Nominal drill bit diameter d_0 [mm]		Diameter of cutting edge d_{cut} [mm]		Steel brush diameter d_b [mm]		Cleaning nozzle [mm]	Extension tube [mm]	Injection adapter [colour]	
10	12[1)]	14[1)]	≤ 12,5	≤ 14,5	12,5	15	11	9	white	blue
12	14[1)]	16[1)]	≤ 14,5	≤ 16,5	15	17	15		blue	red
14	18		≤ 18,5		19			9 or 15	yellow	
16	20		≤ 20,55		25		19		green	
20	25		≤ 25,55		26,5				black	
25	30		≤ 30,55		32		28		grey	

[1)]Both drill bit diameters can be use

electronic copy of the eta by dibt: eta-15/0539

Rebar connection with fischer FIS VL

Intended use
Installation tools for drilling and cleaning the bore hole and injection installation of the mortar

Annex B 4

Safety regulations	Review the Material Safety Data Sheet (MSDS) before use for proper and safe handling! Wear well-fitting protective goggles and protective gloves when working with mortar fischer FIS VL Important: Observe the instructions for use provided with each cartridge.

1. Drill hole

Note: Before drilling, remove carbonized concrete; clean contact areas (see Annex B 1)
In case of aborted drill hole the drill hole shall be filled with mortar.

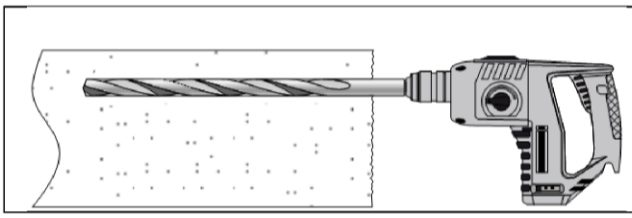

Drill hole to the required embedment depth using a hammer-drill with carbide drill bit set in rotation hammer mode or a compressed air drill.
Drill bit sizes see Table B4.

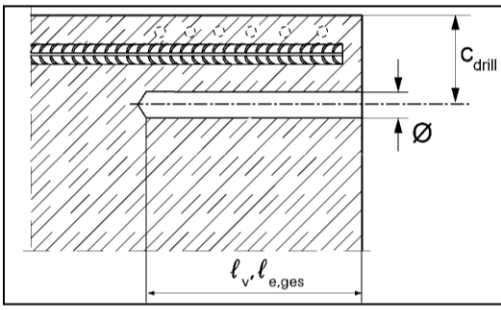

Measure and control concrete cover c
$c_{drill} = c + \phi / 2$
Drill parallel to surface edge and to existing rebar
Where applicable use fischer drilling aid.

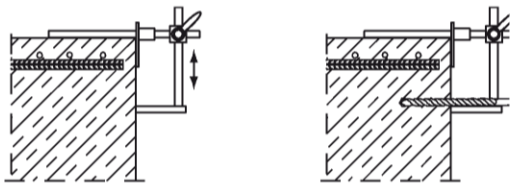

For holes ℓ_v > 20 cm use drilling aid.
Three different options can be considered:

A) fischer drilling aid
B) Slat or spirit level
C) Visual check

Rebar connection with fischer FIS VL	**Annex B 5**
Intended use Installation instruction part 1	

electronic copy of the eta by dibt: eta-15/0539

2.1 Compressed air cleaning

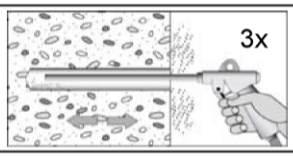	**Blowing** three times from the back of the hole with oil-free compressed air (min. 6 bar) until return air stream is free of noticeable dust.
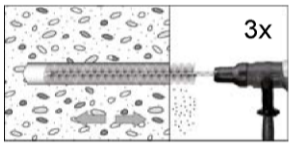	**Brushing (with power drill)** three times with the specified brush size (brush diameter >: borehole diameter) by inserting the round steel brush to the back of the hole in a twisting motion. The brush shall produce natural resistance as it enters the anchor hole. If this is not the case, please use a new brush or a brush with a larger diameter. For appropriate brushes see Table B4.
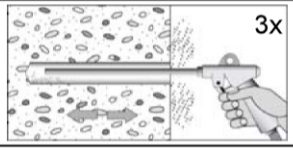	**Blowing (control)** three times from the back of the hole with oil-free compressed air (min. 6 bar) until return air stream is free of noticeable dust.

electronic copy of the eta by dibt: eta-15/0539

3. Rebar preparation and cartridge preparation

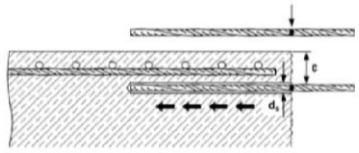	Before use, make asure that the rebar is dry and free of oil or other residue. Mark the embedment depth on the rebar (e.g. with tape) ℓ_v Insert rebar in borehole, to verify hole and setting depth ℓ_v resp. $\ell_{e,ges}$
	Injection system preparation
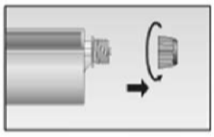	No. 1: Twist off the sealing cap
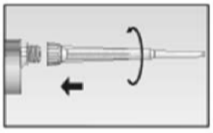	No. 2: Twist on the static mixer (the spiral in the static mixer must be clearly visible).
	No. 3: Place the cartridge into a suitable dispenser.
	No. 4: Press out approximately 10 cm of mortar until the resin is permanently grey in colour. mortar which is not grey in colour will not cure and must be disposed of.

4. Inject mortar into borehole
4.1 borehole depth ≤ 250 mm:

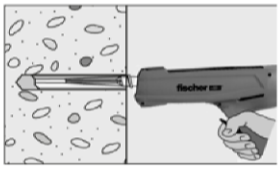	Inject the mortar from the back of the hole towards the front and slowly withdraw the mixing nozzle step by step after each trigger pull. Fill holes approximately 2/3 full, or as required to ensure that the annular gap between the rebar and the concrete is completely filled with adhesive over the embedment length.
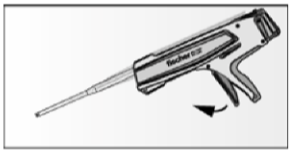	After injecting, depressurize the dispenser by pressing the release trigger. This will prevent further mortar discharge from the mixing nozzle.

electronic copy of the eta by dibt: eta-15/0539

Rebar connection with fischer FIS VL

Intended use
Installation instruction part 3

Annex B 7

4.2 borehole depth > 250 mm:

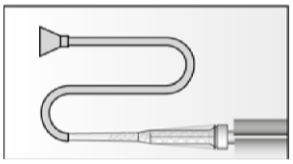	Assemble mixing nozzle, extension tube and injection adapter (see Table B 4)
Mortar level mark 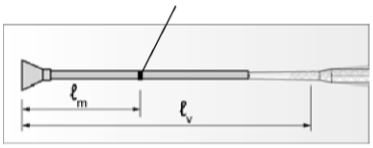	Mark the required mortar level ℓ_m and embedment depth ℓ_v resp. $\ell_{e,ges}$ with tape or marker on the injection extension tube. a) Estimation: $l_m = \frac{1}{3} * l_v \; resp. \; l_m = \frac{1}{3} * l_{e,ges}$ b) Precise formula for optimum mortar volume: $l_m = l_v \; resp. \; l_{e,ges} \left((1{,}2 * \frac{d_s^2}{d_0^2} - 0{,}2) \right)$ [mm]
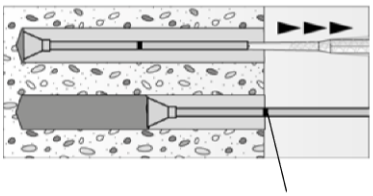 Mortar level mark	Insert injection adapter to back of the hole. Begin injection allowing the pressure of the injected adhesive mortar to push the injection adapter towards the front of the hole. Fill holes approximately 2/3 full, or as required to ensure that the annular gap between the rebar and the concrete is completely filled with adhesive over the embedment length. When using an injection adapter continue injection until the mortar level mark ℓ_m becomes visible. Maximum embedment depth see Table B 2
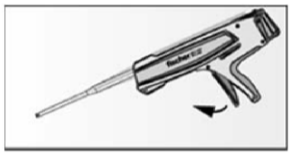	After injecting, depressurize the dispenser by pressing the release trigger. This will prevent further mortar discharge from the mixing nozzle.

electronic copy of the eta by dibt: eta-15/0539

4.3 Insert rebar

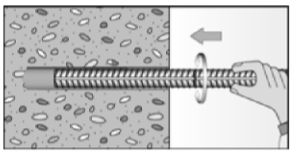	For each installation insert the rebar slowly twisted into the borehole until the embedment mark is at the concrete surface level.
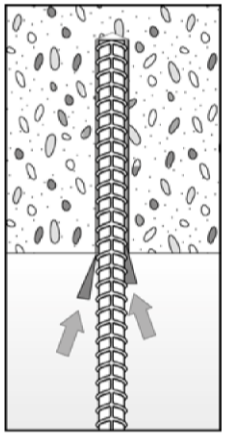	Support the rebar and secure it from falling till mortar started to harden, e.g. using wedges.
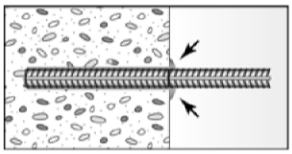	After installing the rebar the annular gap must be completely filled with mortar. Proper installation • Desired anchoring embedment is reached ℓ_v: embedment mark at concrete surface. • Excess mortar flows out of the borehole after the rebar has been fully inserted until the embedment mark.
	Observe the working time "t_{work}" (see Table B3), which varies according to temperature of base material. Minor adjustments to the rebar position may be performed during the working time Full load may be applied only after the curing time "t_{cure}" has elapsed (see Table B 3)

electronic copy of the eta by dibt: eta-15/0539

Rebar connection with fischer FIS VL

Intended use
Installation instruction part 5

Annex B 9

Minimum anchorage length and minimum lap length

The minimum anchorage length $\ell_{b,min}$ and the minimum lap length $\ell_{o,min}$ according to EN 1992-1-1:2004+AC:2010 ($\ell_{b,min}$ acc. to Eq. 8.6 and Eq. 8.7 and $\ell_{o,min}$ acc. to Eq. 8.11) shall be multiply by a factor according to Table C1.

Table C1: Factor related to concrete class and drilling method

Concrete class	Drilling method	Factor
C20/25 to C35/45	Hammer drilling and compressed air drilling	1,0

Table C2: Design values of the ultimate bond resistance f_{bd} in N/mm² for hammer drilling and compressed air drilling

According to EN 1992-1-1: 2004+AC:2010 for good bonds conditions (for all other bond conditions multiply the values by 0,7)

Rebar	Bond resistance f_{bd} [N/mm²]			
	Concrete class			
ϕ [mm]	C20/25	C25/30	C30/37	C35/45
10 to 25	2,3	2,7	3,0	3,4

electronic copy of the eta by dibt: eta-15/0539