Deutsches Institut für Bautechnik DIBt

Member of EOTA
www.eota.eu

Approval body for construction products and types of construction

Bautechnisches Prüfamt

An institution established by the Federal and Laender Governments

Designated according to Article 29 of Regulation (EU) No 305/2011 and member of EOTA (European Organisation for Technical Assessment)

European Technical Assessment

ETA-99/0010 of 6 April 2016

English translation prepared by DIBt - Original version in German language

General Part

Technical Assessment Body issuing the European Technical Assessment:	Deutsches Institut für Bautechnik
Trade name of the construction product	Wedge anchor BZ plus and BZ-IG
Product family to which the construction product belongs	Torque controlled expansion anchor for use in concrete
Manufacturer	MKT Metall-Kunststoff-Technik GmbH & Co. KG Auf dem Immel 2 67685 Weilerbach
Manufacturing plant	MKT Metall-Kunststoff-Technik GmbH & Co. KG Auf dem Immel 2 67685 Weilerbach
This European Technical Assessment contains	35 pages including 3 annexes which form an integral part of this assessment
This European Technical Assessment is issued in accordance with Regulation (EU) No 305/2011, on the basis of	Guideline for European technical approval of "Metal anchors for use in concrete", ETAG 001 Part 2: "Torque controlled expansion anchors", April 2013, used as European Assessment Document (EAD) according to Article 66 Paragraph 3 of Regulation (EU) No 305/2011.
This version replaces	ETA-99/0010 issued on 9 December 2015

electronic copy of the eta by dibt: eta-99/0010

Deutsches Institut für Bautechnik
Kolonnenstraße 30 B | 10829 Berlin | GERMANY | Phone: +49 30 78730-0 | Fax: +49 30 78730-320 | Email: dibt@dibt.de | www.dibt.de

The European Technical Assessment is issued by the Technical Assessment Body in its official language. Translations of this European Technical Assessment in other languages shall fully correspond to the original issued document and shall be identified as such.

Communication of this European Technical Assessment, including transmission by electronic means, shall be in full. However, partial reproduction may only be made with the written consent of the issuing Technical Assessment Body. Any partial reproduction shall be identified as such.

This European Technical Assessment may be withdrawn by the issuing Technical Assessment Body, in particular pursuant to information by the Commission in accordance with Article 25(3) of Regulation (EU) No 305/2011.

electronic copy of the eta by dibt: eta-99/0010

Specific Part

1 Technical description of the product

The MKT Wedge anchor BZ plus and BZ-IG is an anchor made of galvanised steel or made of stainless steel or high corrosion resistant steel which is placed into a drilled hole and anchored by torque-controlled expansion. The following anchor types are covered:

- Anchor type BZ plus with external thread, washer and hexagon nut, sizes M8 to M27,
- Anchor type BZ-IG S with internal thread, hexagon head nut and washer S-IG, sizes M6 to M12,
- Anchor type BZ-IG SK with internal thread, countersunk head screw and countersunk washer SK-IG, sizes M6 to M12,
- Anchor type BZ-IG B with internal thread, hexagon nut and washer MU-IG, sizes M6 to M12.

The product description is given in Annex A.

2 Specification of the intended use in accordance with the applicable European Assessment Document

The performances given in Section 3 are only valid if the anchor is used in compliance with the specifications and conditions given in Annex B.

The verifications and assessment methods on which this European Technical Assessment is based lead to the assumption of a working life of the anchor of at least 50 years. The indications given on the working life cannot be interpreted as a guarantee given by the producer, but are to be regarded only as a means for choosing the right products in relation to the expected economically reasonable working life of the works.

3 Performance of the product and references to the methods used for its assessment

3.1 Mechanical resistance and stability (BWR 1)

Essential characteristic	Performance
Characteristic resistance for static and quasi static action for BZ plus	See Annex C 1 to C 5
Characteristic resistance for seismic performance categories C1 and C2 for BZ plus	See Annex C 6
Characteristic resistance for static and quasi static action for BZ-IG	See Annex C 11 to C 13
Displacements under tension and shear loads for BZ plus	See Annex C 9 to C 10
Displacements under tension and shear loads for BZ-IG	See Annex C 15

electronic copy of the eta by dibt: eta-99/0010

3.2 Safety in case of fire (BWR 2)

Essential characteristic	Performance
Reaction to fire	Anchorages satisfy requirements for Class A1
Resistance to fire for BZ plus	See Annex C 7 and C 8
Resistance to fire for BZ-IG	See Annex C 14

3.3 Safety in use (BWR 4)

The essential characteristics regarding Safety in use are included under the Basic Works Requirement Mechanical resistance and stability.

4 Assessment and verification of constancy of performance (AVCP) system applied, with reference to its legal base

In accordance with guideline for European technical approval ETAG 001, April 2013, used as European Assessment Document (EAD) according to Article 66 Paragraph 3 of Regulation (EU) No 305/2011, the applicable European legal act is: [96/582/EC].

The system to be applied is: 1

5 Technical details necessary for the implementation of the AVCP system, as provided for in the applicable European Assessment Document

Technical details necessary for the implementation of the AVCP system are laid down in the control plan deposited at Deutsches Institut für Bautechnik.

Issued in Berlin on 6 April 2016 by Deutsches Institut für Bautechnik

Uwe Bender
Head of Department

beglaubigt:
Baderschneider

electronic copy of the eta by dibt: eta-99/0010

Wedge anchor BZ plus

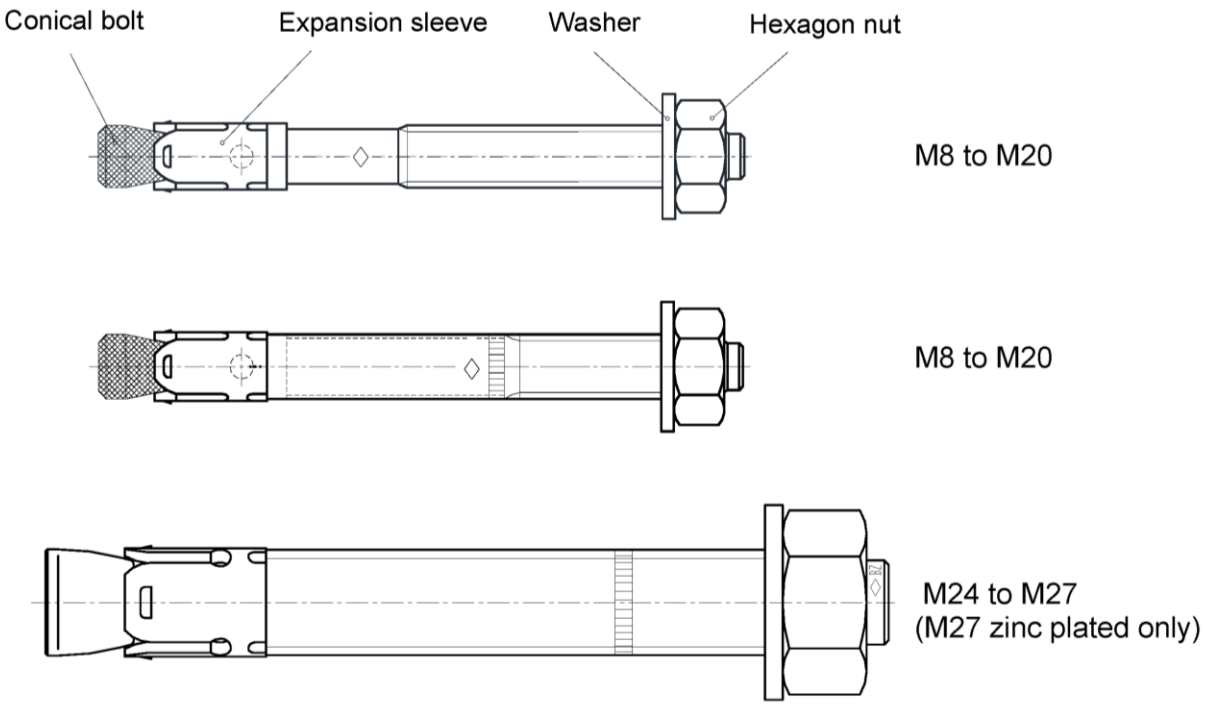

Wedge anchor BZ-IG M6 to M12

Anchor system

BZ-IG S	Conical bolt 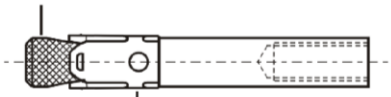 Expansion sleeve	Washer	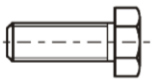 Hexagon head screw
BZ-IG SK		Countersunk washer	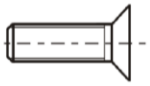 Countersunk head screw
BZ-IG B		Washer Hexagon nut 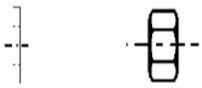	Commercial standard rod 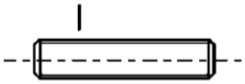

Anchor version	Product description	Intended use	Performance
BZ plus	Annex A1 – Annex A4	Annex B1 – Annex B6	Annex C1 – Annex C10
BZ-IG	Annex A1 Annex A5 – Annex A7	Annex B1 – Annex B2 Annex B7 – Annex B9	Annex C11 – Annex C15

Wedge Anchor BZ plus and BZ-IG	**Annex A1**
Product description Anchor types	

electronic copy of the eta by dibt: eta-99/0010

Intended use Wedge Anchor BZ plus

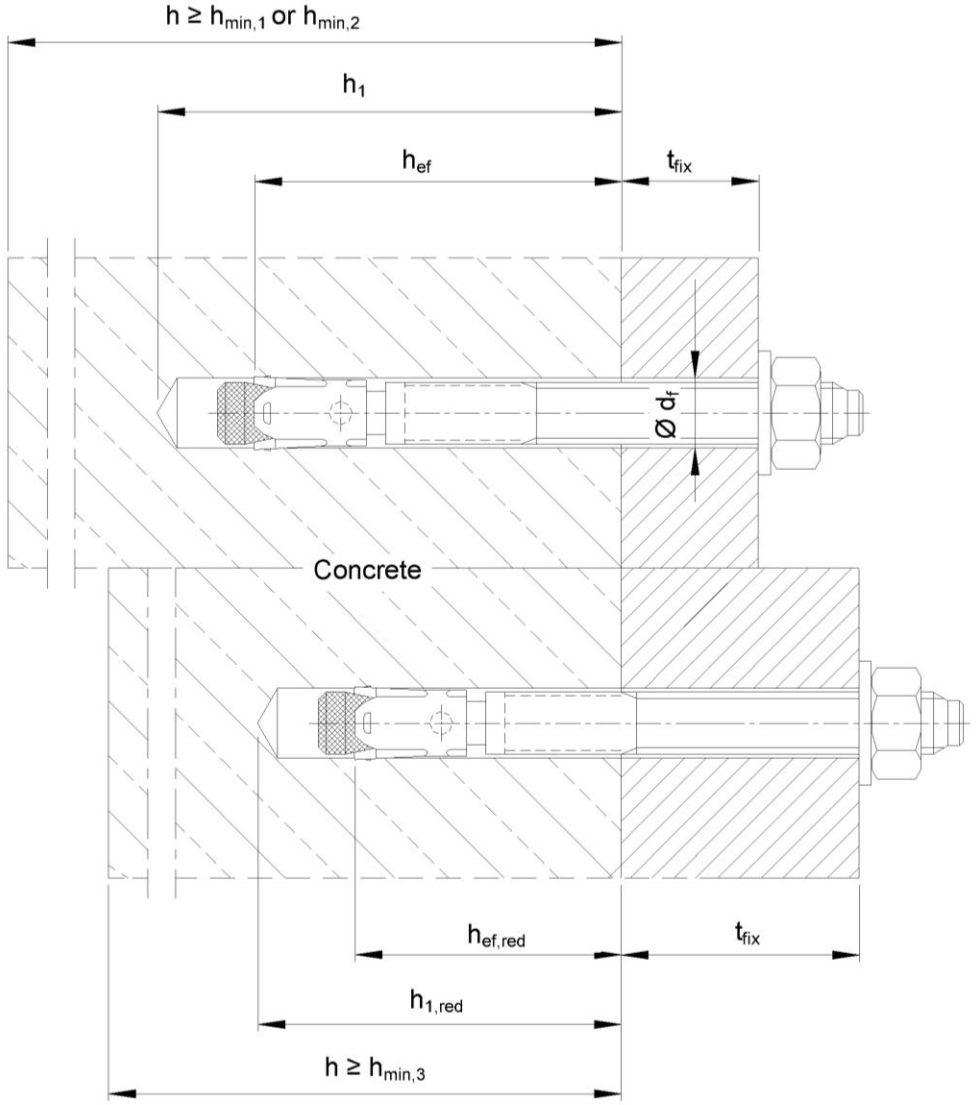

Wedge Anchor BZ plus	
Product description Installation situation BZ plus	**Annex A2**

electronic copy of the eta by dibt: eta-99/0010

Anchor size BZ plus M8 to M20:

Marking 1 e.g.: ◇ BZ 15/35

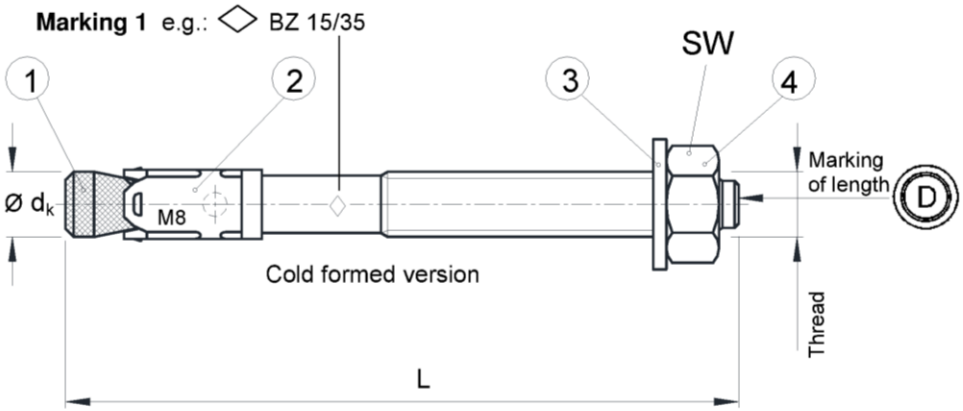

Marking 1 e.g.: ◇ BZ 15/35

◇ Identifying mark of manufacturing plant
BZ Trade name
15 maximum thickness of fixture for h_{ef}
35 max. thickness of fixture for $h_{ef,red}$
M8 Thread diameter

A4 additional marking of stainless steel
HCR additional marking of high corrosion resistant steel

Marking 2 e.g.: ◇ BZ 15

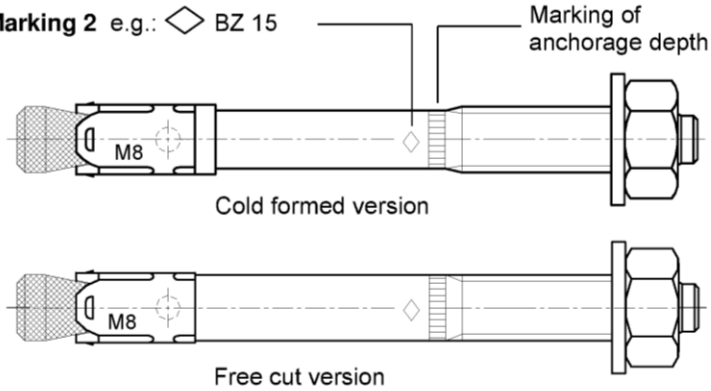

Marking 2 e.g.: ◇ BZ 15

◇ Identifying mark of manufacturing plant
BZ Trade name
15 maximum thickness of fixture for h_{ef}
M8 Thread diameter

A4 additional marking of stainless steel
HCR additional marking of high corrosion resistant steel

Anchor size BZ plus M24 and M27:

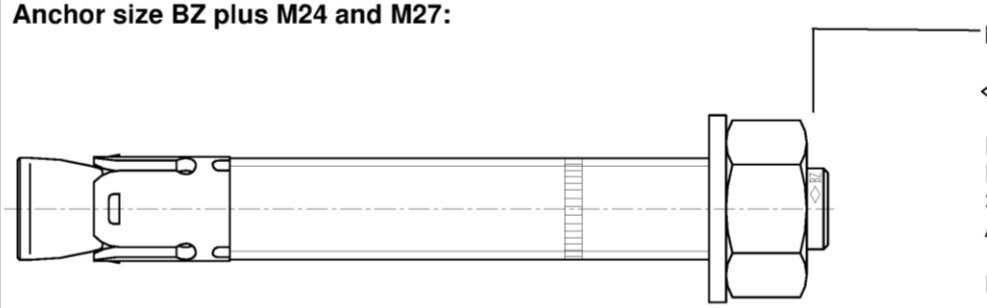

Marking 3 e.g.: ◇ BZ M24-30

◇ Identifying mark of manufacturing plant
BZ Trade name
M24 Thread diameter
30 maximum thickness of fixture
A4 additional marking of stainless steel
HCR additional marking of high corrosion resistant steel

Marking of length	C (c)	D (d)	E (e)	F (f)	G (g)	H (h)	I (i)	J (j)	K (k)	L (l)	M (m)	N (n)
Length of anchor min ≥	63,5	76,2	88,9	101,6	114,3	127,0	139,7	152,4	165,1	177,8	190,5	203,2
Length of anchor max <	76,2	88,9	101,6	114,3	127,0	139,7	152,4	165,1	177,8	190,5	203,2	215,9

Marking of length	O (o)	P (p)	Q (q)	R (r)	S (s)	T (t)	U (u)	V (v)	W (w)	X (x)	Y (y)	Z (z)
Length of anchor min ≥	215,9	228,6	241,3	254,0	279,4	304,8	330,2	355,6	381,0	406,4	431,8	457,2
Length of anchor max <	228,6	241,3	254,0	279,4	304,8	330,2	355,6	381,0	406,4	431,8	457,2	483,0

Wedge Anchor BZ plus

Product description
Anchor sizes and marking

Annex A3

electronic copy of the eta by dibt: eta-99/0010

Table A1: Anchor dimensions BZ plus

	Anchor size			M8	M10	M12	M16	M20	M24	M27
1	Conical bolt		Thread	M8	M10	M12	M16	M20	M24	M27
			$\varnothing\ d_k$ =	7,9	9,8	12,0	15,7	19,7	24	28
	Length of anchor	Steel, zinc plated	L	65 + t_{fix}	80 + t_{fix}	96,5+t_{fix}	118+t_{fix}	137+t_{fix}	161+t_{fix}	178+t_{fix}
		A4, HCR	L	65 + t_{fix}	80 + t_{fix}	96,5+t_{fix}	118+t_{fix}	137+t_{fix}	168+t_{fix}	-
		reduced anchorage depth	$L_{hef,red}$	54 + t_{fix}	60 + t_{fix}	76,5+t_{fix}	98+t_{fix}	-	-	-
2	Expansion sleeve			see Table A2						
3	Washer			see Table A2						
4	Hexagon nut		SW	13	17	19	24	30	36	41

Dimensions in mm

Table A2: Materials BZ plus

No.	Part	BZ plus		BZ plus A4	BZ plus HCR
		Steel, zinc plated		Stainless steel A4	High corrosion resistant steel (HCR)
1	Conical bolt	M8 to M20: Cold formed or machined steel, **galvanised** ≥ 5µm, Cone plastic coated	M10 to M20: Cold formed or machined steel, **sherardized** ≥ 40µm, Cone plastic coated	M8 to M20: Stainless steel (e.g. 1.4401, 1.4404, 1.4578, 1.4571) EN 10088:2014, Cone plastic coated	M8 to M20: High corrosion resistant steel 1.4529 or 1.4565, EN 10088:2014, Cone plastic coated
	Threaded bolt and threaded cone	M24 and M27: Steel, galvanised	–	M24: Stainless steel (e.g. 1.4401, 1.4404) EN 10088:2014	M24: High corrosion resistant steel 1.4529 or 1.4565, EN 10088:2014
2	Expansion sleeve	M8 to M20: Steel acc. to EN 10088:2014, material No. 1.4301 or 1.4401 M24 and M27: Steel acc. to EN 10139:1997	M10 to M20: Steel acc. to EN 10088:2014, material No. 1.4301 or 1.4401	Stainless steel (e.g. 1.4401, 1.4404, 1.4571) EN 10088:2014	Stainless steel (e.g. 1.4401, 1.4404, 1.4571) EN 10088:2014
3	Washer	Steel, galvanised	Steel, mechanically galvanised	Stainless steel (e.g. 1.4401, 1.4571) EN 10088:2014	High corrosion resistant steel 1.4529 or 1.4565, EN 10088:2014
4	Hexagon nut	Steel, galvanised, coated	Steel, hot dip galvanised	Stainless steel (e.g. 1.4401, 1.4571) EN 10088:2014, coated	High corrosion resistant steel 1.4529 or 1.4565, EN 10088:2014, coated

electronic copy of the eta by dibt: eta-99/0010

Wedge Anchor BZ plus

Product description
Dimensions and materials

Annex A4

Intended use Wedge anchor BZ-IG

Installation type V
pre-setting installation
pre-set anchor body, the fixture bears on the screw or thread rod only

Installation type D
through-setting installation
the anchor is set through the fixture, the fixture bears on the conical bolt BZ-IG

BZ-IG S consisting of BZ-IG and S-IG

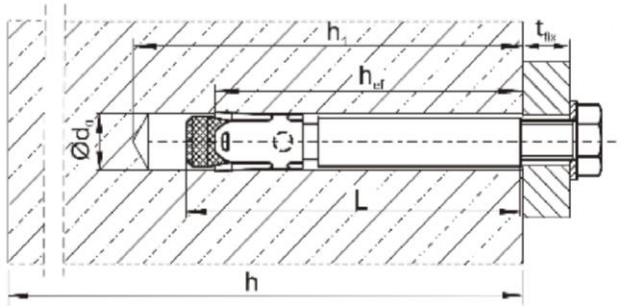

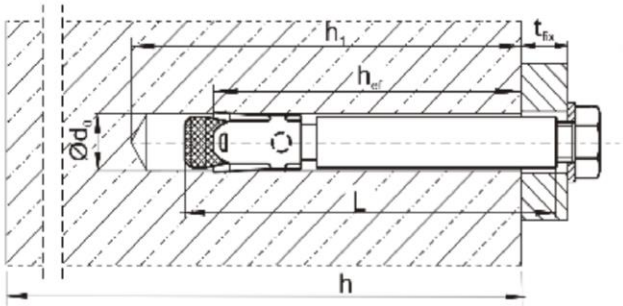

BZ-IG SK consisting of BZ-IG and SK-IG

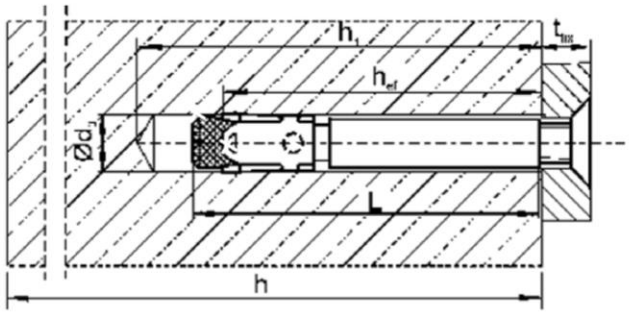

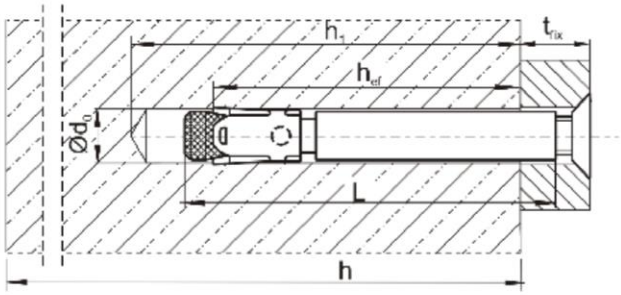

BZ-IG B consisting of BZ-IG and MU-IG

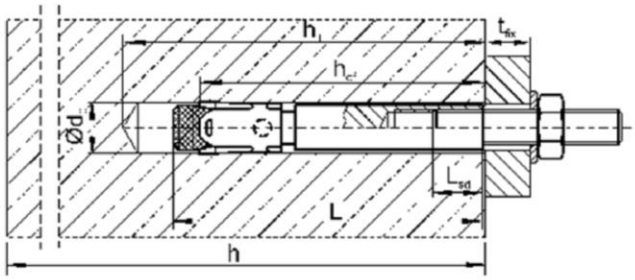

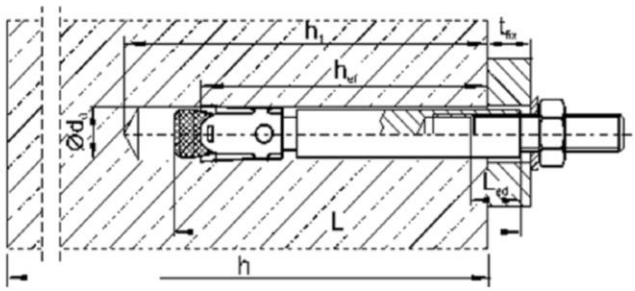

Wedge Anchor BZ-IG	**Annex A5**
Product description Installation situation BZ-IG	

electronic copy of the eta by dibt: eta-99/0010

Marking: ◇ Identifying mark of manufacturing plant
BZ Trade name
M6 Size of internal thread
10 max. thickness of fixture (only installation type D)
A4 additionally for stainless steel
HCR additionally for high corrosion resistant steel

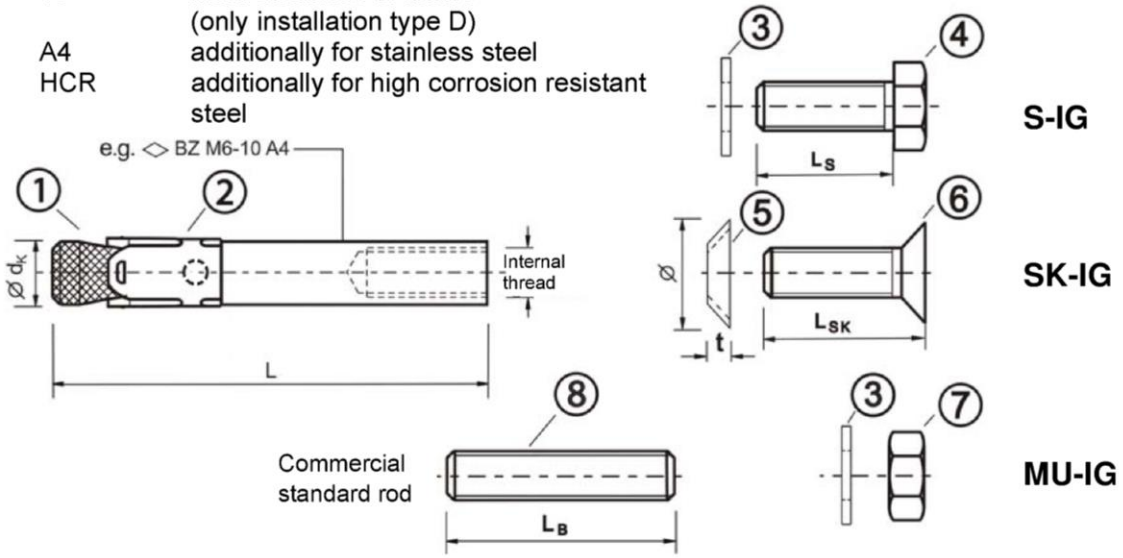

Table A3: Anchor dimensions BZ-IG

No.	Anchor size		M6	M8	M10	M12
1	Conical bolt with Internal thread	Ø d_k	7,9	9,8	11,8	15,7
	Installation type V	L	50	62	70	86
	Installation type D	L	50 + t_{fix}	62 + t_{fix}	70 + t_{fix}	86 + t_{fix}
2	Expansion sleeve		see table A4			
3	Washer		see table A4			
4	Hexagon head screw	width across flats	10	13	17	19
	Installation type V	L_S	t_{fix} + (13 to 21)	t_{fix} + (17 to 23)	t_{fix} + (21 to 25)	t_{fix} + (24 to 29)
	Installation type D	L_S	14 to 20	18 to 22	20 to 22	25 to 28
5	Countersunk washer	Ø countersunk	17,3	21,5	25,9	30,9
		t	3,9	5,0	5,7	6,7
6	Countersunk head screw	bit size	Torx T30	Torx T45 (Steel, zinc plated) T40 (Stainless steel A4, HCR)	Hexagon socket 6 mm	Hexagon socket 8 mm
	Installation type V	L_{SK}	t_{fix} + (11 to 19)	t_{fix} + (15 to 21)	t_{fix} + (19 to 23)	t_{fix} + (21 to 27)
	Installation type D	L_{SK}	16 to 20	20 to 25	25	30
7	Hexagon nut	width across flats	10	13	17	19
8	Commercial standard rod[1]	type V $L_B \geq$	t_{fix} + 21	t_{fix} + 28	t_{fix} + 34	t_{fix} + 41
		type D $L_B \geq$	21	28	34	41

[1] acc. to specifications (Table A4)

Dimensions in mm

Wedge Anchor BZ-IG

Product description
Anchor parts, marking and dimensions

Annex A6

electronic copy of the eta by dibt: eta-99/0010

Table A4: Materials BZ-IG

No.	Part	BZ-IG Steel, zinc plated ≥ 5 µm acc. to EN ISO 4042:1999	BZ-IG A4 Stainless steel A4	BZ-IG HCR High corrosion resistant steel HCR
1	Conical bolt BZ-IG with internal thread	Machined steel, Cone plastic coated	Stainless steel (e.g. 1.4401, 1.4404, 1.4571, 1.4362) EN 10088:2014, Cone plastic coated	High corrosion resistant steel, 1.4529, 1.4565, EN 10088:2014, Cone plastic coated
2	Expansion sleeve BZ-IG	Stainless steel (e.g. 1.4301, 1.4401) EN 10088:2014	Stainless steel (e.g. 1.4401, 1.4571) EN 10088:2014	Stainless steel (e.g. 1.4401, 1.4571) EN 10088:2014
3	Washer S-IG / MU-IG	Steel, galvanised	Stainless steel (e.g. 1.4401, 1.4571) EN 10088:2014	High corrosion resistant steel, 1.4529, 1.4565, EN 10088:2014
4	Hexagon head screw S-IG	Steel, galvanised, coated	Stainless steel (e.g. 1.4401, 1.4571) EN 10088:2014, coated	High corrosion resistant steel, 1.4529, 1.4565, EN 10088:2014, coated
5	Countersunk washer SK-IG	Steel, galvanised	Stainless steel (e.g. 1.4401, 1.4404, 1.4571) EN 10088:2014, zinc plated, coated	High corrosion resistant steel, 1.4529, 1.4565, EN 10088:2014, zinc plated, coated
6	Countersunk head screw SK-IG	Steel, galvanised coated	Stainless steel (e.g. 1.4401, 1.4571) EN 10088:2014, coated	High corrosion resistant steel, 1.4529, 1.4565, EN 10088:2014, coated
7	Hexagon nut MU-IG	Steel, galvanised coated	Stainless steel (e.g. 1.4401, 1.4571) EN 10088:2014, coated	High corrosion resistant steel, 1.4529, 1.4565, EN 10088:2014, coated
8	Commercial standard rod	Property class 8.8, EN ISO 898-1:2013 A_5 > 8 % ductile	Stainless steel (e.g. 1.4401, 1.4571) EN 10088:2014, property class 70, EN ISO 3506:2009	High corrosion resistant steel, 1.4529, 1.4565, EN 10088:2014, property class 70, EN ISO 3506:2009

electronic copy of the eta by dibt: eta-99/0010

Wedge Anchor BZ-IG

Product description
Materials

Annex A7

Specifications of intended use

Wedge Anchor BZ plus							
Standard anchorage depth	**M8**	**M10**	**M12**	**M16**	**M20**	**M24**	**M27**
Steel, galvanised	✓						
Steel, sherardized	-	✓				-	
Stainless steel A4 and high corrosion resistant steel HCR	✓						-
Static or quasi-static action	✓						
Fire exposure	✓						
Seismic action (C1 and C2) [1]	✓					-	-

Reduced anchorage depth [1]	**M8**	**M10**	**M12**	**M16**
Steel, galvanised	✓			
Steel, sherardized	-	✓		
Stainless steel A4 and high corrosion resistant steel HCR	✓			
Static or quasi-static action	✓			
Fire exposure	✓			
Seismic action (C1 and C2)	-			

[1] only cold formed anchors acc. to Annex A3

Wedge Anchor BZ-IG	**M6**	**M8**	**M10**	**M12**
Steel zinc plated	✓			
Stainless steel A4 and high corrosion resistant steel HCR	✓			
Static or quasi-static action	✓			
Fire exposure	✓			
Seismic action (C1 and C2)	-			

Base materials:

- Reinforced or unreinforced normal weight concrete according to EN 206-1:2013
- Strength classes C20/25 to C50/60 according to EN 206-1:2013
- Cracked or non-cracked concrete

Use conditions (Environmental conditions):

- Structures subject to dry internal conditions
  (steel zinc plated, stainless steel or high corrosion resistant steel).
- Structures subject to external atmospheric exposure including industrial and marine environment or exposure to permanently damp internal condition, if no particular aggressive conditions exist
  (stainless steel or high corrosion resistant steel).
- Structures subject to external atmospheric exposure and to permanently damp internal condition, if other particular aggressive conditions
  (high corrosion resistant steel)

  Note: Particular aggressive conditions are e.g. permanent, alternating immersion in seawater or the splash zone of seawater, chloride atmosphere of indoor pools or atmosphere with extreme chemical pollution (e.g. in desulphurization plants or road tunnels where de-icing materials are used.)

electronic copy of the eta by dibt: eta-99/0010

Specifications of intended use

Design:

- Anchorages are designed under the responsibility of an engineer experienced in anchorages and concrete work.
- Verifiable calculation notes and drawings are prepared taking account of the loads to be anchored. The position of the anchor is indicated on the design drawings (e.g. position of the anchor relative to reinforcement or to supports, etc.).
- Anchorages under static or quasi-static actions are designed in accordance with:
  - ETAG 001, Annex C, design method A, Edition August 2010 or
  - CEN/TS 1992-4:2009, design method A
- Anchorages under seismic actions (cracked concrete) are designed in accordance with:
  - EOTA Technical Report TR 045, Edition February 2013
  - Anchorages shall be positioned outside of critical regions (e.g. plastic hinges) of the concrete structure
  - Fastenings in stand-off installation or with a grout layer are not allowed
- Anchorages under fire exposure are designed in accordance with:
  - ETAG 001, Annex C, design method A, Edition August 2010 and EOTA Technical Report TR 020, Edition May 2004 or
  - CEN/TS 1992-4: 2009, Annex D
  - It must be ensured that local spalling of the concrete cover does not occur

Installation:

- Anchor installation carried out by appropriately qualified personnel and under the supervision of the person responsible for technical matters of the site,
- Use of the anchor only as supplied by the manufacturer without exchanging the components of the anchor,
- In case of aborted hole: new drilling at a minimum distance away of twice the depth of the aborted hole or smaller distance if the aborted drill hole is filled with high strength mortar and if under shear or oblique tension load it is not in the direction of load application.

electronic copy of the eta by dibt: eta-99/0010

Table B1: Installation parameters, BZ plus

Anchor size				M8	M10	M12	M16	M20	M24	M27
Nominal drill hole diameter		d_0	[mm]	8	10	12	16	20	24	28
Cutting diameter of drill bit		$d_{cut} \leq$	[mm]	8,45	10,45	12,5	16,5	20,55	24,55	28,55
Installation torque	Steel, galvanised	T_{inst}	[Nm]	20	25	45	90	160	200	300
	Steel, sherardized	T_{inst}	[Nm]	-	22	40	90	160	-	-
	Stainless steel A4, HCR	T_{inst}	[Nm]	20	35	50	110	200	290	-
Diameter of clearance hole in the fixture		$d_f \leq$	[mm]	9	12	14	18	22	26	30
Standard anchorage depth										
Depth of drill hole	Steel, zinc plated	$h_1 \geq$	[mm]	60	75	90	110	125	145	160
	Stainless steel A4, HCR	$h_1 \geq$	[mm]	60	75	90	110	125	155	-
Effective anchorage depth	Steel, zinc plated	h_{ef}	[mm]	46	60	70	85	100	115	125
	Stainless steel A4, HCR	h_{ef}	[mm]	46	60	70	85	100	125	-
Reduced anchorage depth										
Depth of drill hole		$h_{1,red} \geq$	[mm]	49	55	70	90	-	-	-
Reduced effective anchorage depth		$h_{ef,red}$	[mm]	35	40	50	65			

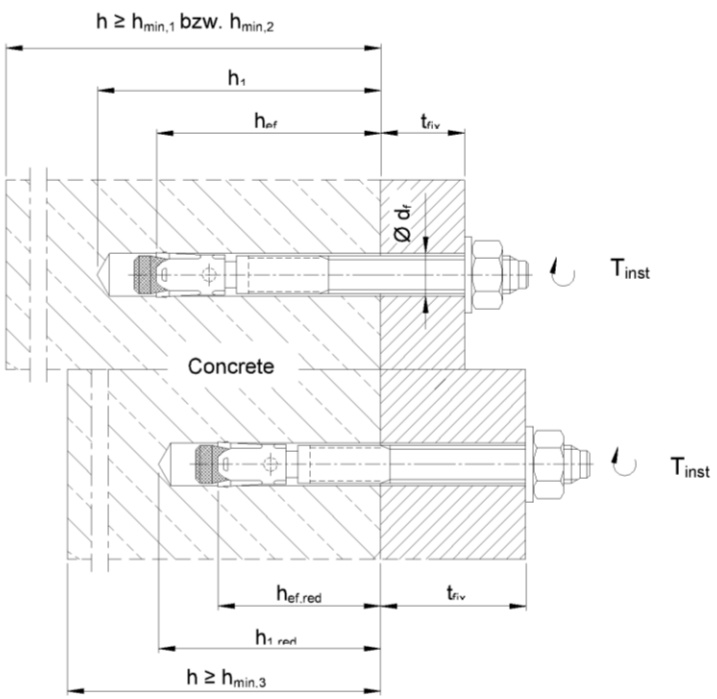

Wedge Anchor BZ plus

Intended use
Installation parameters

Annex B3

electronic copy of the eta by dibt: eta-99/0010

Table B2: Minimum **spacings** and **edge distances, standard anchorage depth,** BZ plus

Anchor size			M8	M10	M12	M16	M20	M24	M27
Standard thickness of concrete member									
Steel zinc plated									
Standard thickness of member	$h_{min,1}$	[mm]	100	120	140	170	200	230	250
Cracked concrete									
Minimum spacing	s_{min}	[mm]	40	45	60	60	95	100	125
	for c ≥	[mm]	70	70	100	100	150	180	300
Minimum edge distance	c_{min}	[mm]	40	45	60	60	95	100	180
	for s ≥	[mm]	80	90	140	180	200	220	540
Non-cracked concrete									
Minimum spacing	s_{min}	[mm]	40	45	60	65	90	100	125
	for c ≥	[mm]	80	70	120	120	180	180	300
Minimum edge distance	c_{min}	[mm]	50	50	75	80	130	100	180
	for s ≥	[mm]	100	100	150	150	240	220	540
Stainless steel A4, HCR									
Standard thickness of member	$h_{min,1}$	[mm]	100	120	140	160	200	250	-
Cracked concrete									
Minimum spacing	s_{min}	[mm]	40	50	60	60	95	125	-
	for c ≥	[mm]	70	75	100	100	150	125	
Minimum edge distance	c_{min}	[mm]	40	55	60	60	95	125	
	for s ≥	[mm]	80	90	140	180	200	125	
Non-cracked concrete									
Minimum spacing	s_{min}	[mm]	40	50	60	65	90	125	-
	for c ≥	[mm]	80	75	120	120	180	125	
Minimum edge distance	c_{min}	[mm]	50	60	75	80	130	125	
	for s ≥	[mm]	100	120	150	150	240	125	
Minimum thickness of concrete member									
Steel zinc plated, stainless steel A4, HCR									
Minimum thickness of member	$h_{min,2}$	[mm]	80	100	120	140	-	-	-
Cracked concrete									
Minimum spacing	s_{min}	[mm]	40	45	60	70	-	-	-
	for c ≥	[mm]	70	90	100	160			
Minimum edge distance	c_{min}	[mm]	40	50	60	80			
	for s ≥	[mm]	80	115	140	180			
Non-cracked concrete									
Minimum spacing	s_{min}	[mm]	40	60	60	80	-	-	-
	for c ≥	[mm]	80	140	120	180			
Minimum edge distance	c_{min}	[mm]	50	90	75	90			
	for s ≥	[mm]	100	140	150	200			

Fire exposure from one side			
Minimum spacing	$s_{min,fi}$	[mm]	See normal ambient temperature
Minimum edge distance	$c_{min,fi}$	[mm]	See normal ambient temperature
Fire exposure from more than one side			
Minimum spacing	$s_{min,fi}$	[mm]	See normal ambient temperature
Minimum edge distance	$c_{min,fi}$	[mm]	≥ 300 mm

Intermediate values by linear interpolation.

Wedge Anchor BZ plus

Intended use
Minimum **spacings** and **edge distances** for **standard anchorage depth**

Annex B4

electronic copy of the eta by dibt: eta-99/0010

Table B3: Minimum **spacings** and **edge distances, reduced anchorage depth,** BZ plus

Anchor size			**M8**	**M10**	**M12**	**M16**
Minimum thickness of concrete member	$h_{min,3}$	[mm]	80	80	100	140
Cracked concrete						
Minimum spacing	s_{min}	[mm]	50	50	50	65
	for c ≥	[mm]	60	100	160	170
Minimum edge distance	c_{min}	[mm]	40	65	65	100
	for s ≥	[mm]	185	180	250	250
Non-cracked concrete						
Minimum spacing	s_{min}	[mm]	50	50	50	65
	for c ≥	[mm]	60	100	160	170
Minimum edge distance	c_{min}	[mm]	40	65	100	170
	for s ≥	[mm]	185	180	185	65
Fire exposure from one side						
Minimum spacing	$s_{min,fi}$	[mm]	See normal ambient temperature			
Minimum edge distance	$c_{min,fi}$	[mm]	See normal ambient temperature			
Fire exposure from more than one side						
Minimum spacing	$s_{min,fi}$	[mm]	See normal ambient temperature			
Minimum edge distance	$c_{min,fi}$	[mm]	≥ 300 mm			

Intermediate values by linear interpolation.

electronic copy of the eta by dibt: eta-99/0010

Wedge Anchor BZ plus

Intended use
Minimum **spacings** and **edge distances** for **reduced anchorage depth**

Annex B5

Installation instructions BZ plus

1	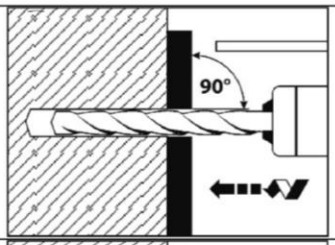	Drill hole perpendicular to concrete surface.
2	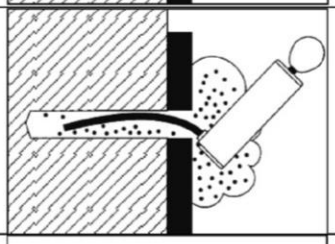	Blow out dust. Alternatively vacuum clean down to the bottom of the hole.
3	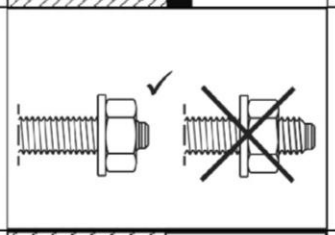	Check position of nut.
4	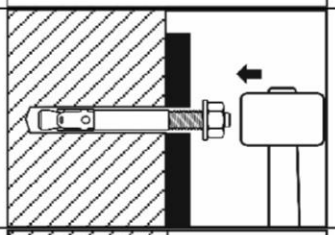	Drive in anchor, such that h_{ef} or $h_{ef,red}$ depth is met. This compliance is ensured, if the thickness of fixture is not greater than the maximum thickness of fixture marked on the anchor in accordance with Annex A3.
5	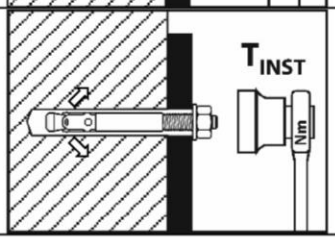	Max. tightening torque T_{inst} shall be applied by using calibrated torque wrench.

electronic copy of the eta by dibt: eta-99/0010

Wedge Anchor BZ plus

Intended Use
Installation instructions

Annex B6

Table B4: Installation parameters BZ-IG

Anchor size				M6	M8	M10	M12
Effective anchorage depth		h_{ef}	[mm]	45	58	65	80
Drill hole diameter		d_0	[mm]	8	10	12	16
Cutting diameter of drill bit		$d_{cut} \leq$	[mm]	8,45	10,45	12,5	16,5
Depth of drill hole		$h_1 \geq$	[mm]	60	75	90	105
Screwing depth of threaded rod		L_{sd} [2] $\geq$	[mm]	9	12	15	18
Installation moment, steel zinc plated	T_{inst}	S	[Nm]	10	30	30	55
		SK	[Nm]	10	25	40	50
		B	[Nm]	8	25	30	45
Installation moment, stainless steel A4, HCR	T_{inst}	S	[Nm]	15	40	50	100
		SK	[Nm]	12	25	45	60
		B	[Nm]	8	25	40	80
Installation type V (Pre-setting installation)							
Diameter of clearance hole in the fixture		$d_f \leq$	[mm]	7	9	12	14
Minimum thickness of fixture	$t_{fix} \geq$	S	[mm]	1	1	1	1
		SK	[mm]	5	7	8	9
		B	[mm]	1	1	1	1
Installation type D (Through-setting installation)							
Diameter of clearance hole in the fixture		$d_f \leq$	[mm]	9	12	14	18
Minimum thickness of fixture [1]	$t_{fix} \geq$	S	[mm]	5	7	8	9
		SK	[mm]	9	12	14	16
		B	[mm]	5	7	8	9

[1] The minimum thickness of fixture can be reduced to the value of installation type V, if the shear load at steel failure is designed with lever arm.
[2] see Annex A5

Table B5: Minimum spacings and edge distances BZ-IG

Anchor size			M6	M8	M10	M12
Minimum thickness of concrete member	h_{min}	[mm]	100	120	130	160
Cracked concrete						
Minimum spacing	s_{min}	[mm]	50	60	70	80
	for c ≥	[mm]	60	80	100	120
Minimum edge distance	c_{min}	[mm]	50	60	70	80
	for s ≥	[mm]	75	100	100	120
Non-cracked concrete						
Minimum spacing	s_{min}	[mm]	50	60	65	80
	for c ≥	[mm]	80	100	120	160
Minimum edge distance	c_{min}	[mm]	50	60	70	100
	for s ≥	[mm]	115	155	170	210
Fire exposure from one side						
Minimum spacing	$s_{min,fi}$	[mm]	See normal temperature			
Minimum edge distance	$c_{min,fi}$	[mm]	See normal temperature			
Fire exposure from more than one side						
Minimum spacing	$s_{min,fi}$	[mm]	See normal temperature			
Minimum edge distance	$c_{min,fi}$	[mm]	≥ 300 mm			

Intermediate values by linear interpolation.

Wedge Anchor BZ-IG

Intended use
Installation parameters, minimum spacings and edge distances

Annex B7

electronic copy of the eta by dibt: eta-99/0010

Installation instructions BZ-IG

Pre-setting installation

1	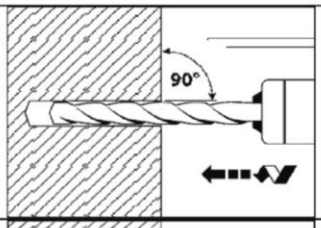	Drill hole perpendicular to concrete surface.
2	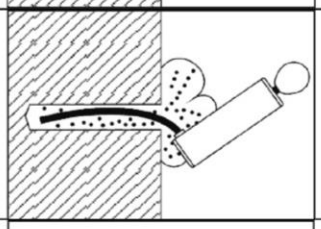	Blow out dust. Alternatively vacuum clean down to the bottom of the hole.
3	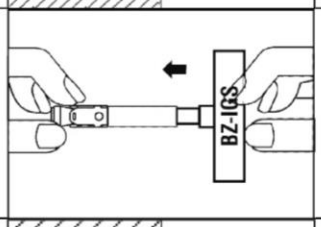	Setting tool for **pre-setting installation** insert in anchor. 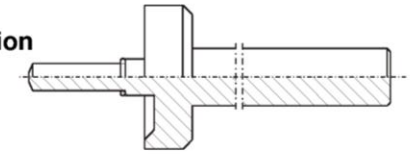
4	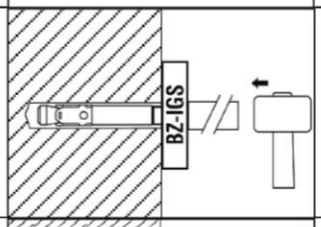	Drive in anchor with setting tool.
5	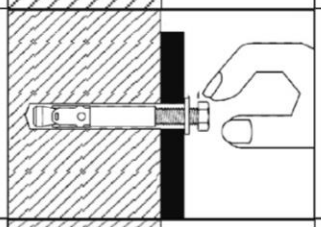	Drive in srew.
6	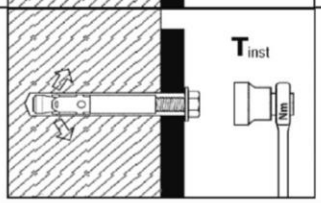	Max. tightening torque T_{inst} may be applied by using calibrated torque wrench.

electronic copy of the eta by dibt: eta-99/0010

Wedge Anchor BZ-IG

Intended Use
Installation instructions for pre-setting installation

Annex B8

Installation instructions BZ-IG

Through-setting installation

1	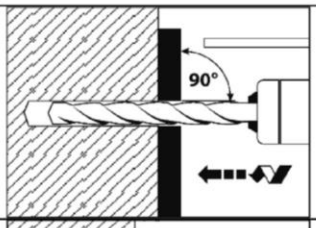	Drill hole perpendicular to concrete surface.
2	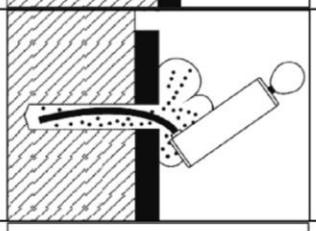	Blow out dust. Alternatively vacuum clean down to the bottom of the hole.
3	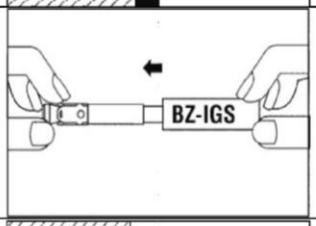	Setting tool for **through-setting installation** insert in anchor. 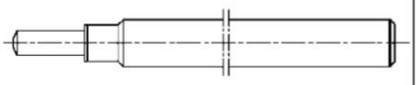
4	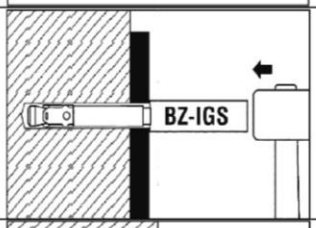	Drive in anchor with setting tool.
5	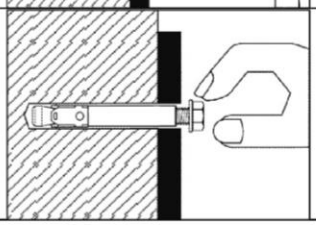	Drive in screw.
6	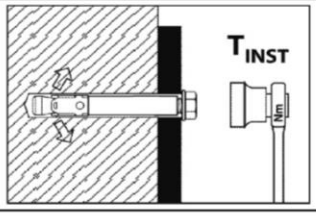	Max. tightening torque T_{inst} may be applied by using calibrated torque wrench.

electronic copy of the eta by dibt: eta-99/0010

Wedge Anchor BZ-IG

Intended Use
Installation instructions for through-setting installation

Annex B9

Table C1: Characteristic values for **tension loads,** BZ plus **zinc plated, cracked concrete,** static and quasi-static action

Anchor size			**M8**	**M10**	**M12**	**M16**	**M20**	**M24**	**M27**
Installation safety factor	$\gamma_2 = \gamma_{inst}$	[-]	1,0						
Steel failure									
Characteristic tension resistance	$N_{Rk,s}$	[kN]	16	27	40	60	86	126	196
Partial safety factor	γ_{Ms}	[-]	1,53		1,5		1,6	1,5	
Pull-out									
Standard anchorage depth									
Characteristic resistance in concrete C20/25	$N_{Rk,p}$	[kN]	5	9	16	25	1)	1)	1)
Reduced anchorage depth									
Characteristic resistance in concrete C20/25	$N_{Rk,p}$	[kN]	5	7,5	1)	1)	-	-	-
Increasing factor for $N_{Rk,p}$	ψc	[-]	$\left(\frac{f_{ck,cube}}{25}\right)^{0,5}$						
Concrete cone failure									
Effective anchorage depth	h_{ef}	[mm]	46	60	70	85	100	115	125
Reduced anchorage depth	$h_{ef,red}$	[mm]	35 2)	40	50	65	-	-	-
Factor acc. to CEN/TS 1992-4	k_{cr}	[-]	7,2						

1) Pull-out is not decisive.
2) Use restricted to anchoring of structural components statically indeterminate.

electronic copy of the eta by dibt: eta-99/0010

Table C2: Characteristic values for **tension loads,** BZ plus **A4** / **HCR, cracked concrete,** static and quasi-static action

Anchor size			**M8**	**M10**	**M12**	**M16**	**M20**	**M24**
Installation safety factor	$\gamma_2 = \gamma_{inst}$	[-]	1,0					
Steel failure								
Characteristic tension resistance	$N_{Rk,s}$	[kN]	16	27	40	64	108	110
Partial safety factor	γ_{Ms}	[-]	1,5				1,68	1,5
Pull-out								
Standard anchorage depth								
Characteristic resistance in concrete C20/25	$N_{Rk,p}$	[kN]	5	9	16	25	1)	40
Reduced anchorage depth								
Characteristic resistance in concrete C20/25	$N_{Rk,p}$	[kN]	5	7,5	1)	1)	-	-
Increasing factor for $N_{Rk,p}$	ψc	[-]	$\left(\frac{f_{ck,cube}}{25}\right)^{0,5}$					
Concrete cone failure								
Effective anchorage depth	h_{ef}	[mm]	46	60	70	85	100	125
Reduced anchorage depth	$h_{ef,red}$	[mm]	35 2)	40	50	65	-	-
Factor according to CEN/TS 1992-4	k_{cr}	[-]	7,2					

1) Pull-out is not decisive.
2) Use restricted to anchoring of structural components statically indeterminate.

electronic copy of the eta by dibt: eta-99/0010

Wedge Anchor BZ plus

Performance
Characteristic values for **tension loads,** BZ plus **A4** / **HCR, cracked concrete,** static and quasi-static action

Annex C2

Table C3: Characteristic values for **tension loads,** BZ plus **zinc plated, non-cracked concrete,** static and quasi-static action

Anchor size			**M8**	**M10**	**M12**	**M16**	**M20**	**M24**	**M27**
Installation safety factor	$\gamma_2 = \gamma_{inst}$	[-]	1,0						
Steel failure									
Characteristic tension resistance	$N_{Rk,s}$	[kN]	16	27	40	60	86	126	196
Partial safety factor	γ_{Ms}	[-]	1,53		1,5		1,6	1,5	
Pull-out									
Standard anchorage depth									
Characteristic resistance in non-cracked concrete C20/25	$N_{Rk,p}$	[kN]	12	16	25	35	1)	1)	1)
Reduced anchorage depth									
Characteristic resistance in non-cracked concrete C20/25	$N_{Rk,p}$	[kN]	7,5	9	1)	1)	-	-	-
Splitting For the proof against splitting failure $N^0_{Rk,c}$ has to be replaced by $N^0_{Rk,sp}$ with consideration of the member thickness									
Standard anchorage depth									
Splitting for **standard thickness of concrete member** (The higher resistance of case 1 and case 2 may be applied; the values $s_{cr,sp}$ and $c_{cr,sp}$ may be linearly interpolated for the member thickness $h_{min,2} < h < h_{min,1}$ (Case 2); $\psi_{h,sp}$= 1,0))									
Standard thickness of concrete	$h_{min,1} \geq$	[mm]	100	120	140	170	200	230	250
Case 1									
Characteristic resistance in non-cracked concrete C20/25	$N^0_{Rk,sp}$	[kN]	9	12	20	30	40	62,3	50
Spacing (edge distance)	$s_{cr,sp}$ (= 2 $c_{cr,sp}$)	[mm]	3 h_{ef}						
Case 2									
Characteristic resistance in non-cracked concrete C20/25	$N^0_{Rk,sp}$	[kN]	12	16	25	35	50,5	62,3	70,6
Spacing (edge distance)	$s_{cr,sp}$ (= 2 $c_{cr,sp}$)	[mm]	4 h_{ef}				4,4 h_{ef}	3 h_{ef}	5 h_{ef}
Splitting for **minimum thickness of concrete member**									
Minimum thickness of concrete	$h_{min,2} \geq$	[mm]	80	100	120	140	-	-	-
Characteristic resistance in non-cracked concrete C20/25	$N^0_{Rk,sp}$	[kN]	12	16	25	35			
Spacing (edge distance)	$s_{cr,sp}$ (= 2 $c_{cr,sp}$)	[mm]	5 h_{ef}						
Reduced anchorage depth									
Minimum thickness of concrete	$h_{min,3} \geq$	[mm]	80	80	100	140	-	-	-
Characteristic resistance in non-cracked concrete C20/25	$N^0_{Rk,sp}$	[kN]	7,5	9	17,9	26,5			
Spacing (edge distance)	$s_{cr,sp}$ (= 2 $c_{cr,sp}$)	[mm]	200	200	250	300			
Increasing factor for $N_{Rk,p}$ and $N^0_{Rk,sp}$	ψ_c	[-]	$\left(\frac{f_{ck,cube}}{25}\right)^{0,5}$						
Concrete cone failure									
Effective anchorage depth	h_{ef}	[mm]	46	60	70	85	100	115	125
Reduced anchorage depth	$h_{ef,red}$	[mm]	35 2)	40	50	65	-	-	-
Factor according to CEN/TS 1992-4	k_{ucr}	[-]	10,1						

1) Pull-out is not decisive.
2) Use restricted to anchoring of structural components statically indeterminate.

Wedge Anchor BZ plus

Performance
Characteristic values for **tension loads,** BZ plus **zinc plated, non-cracked concrete,** static and quasi-static action

Annex C3

electronic copy of the eta by dibt: eta-99/0010

Table C4: Characteristic values for **tension loads,** BZ plus **A4** / **HCR, non-cracked concrete,** static and quasi-static action

Anchor size			**M8**	**M10**	**M12**	**M16**	**M20**	**M24**
Installation safety factor	$\gamma_2 = \gamma_{inst}$	[-]	1,0					
Steel failure								
Characteristic tension resistance	$N_{Rk,s}$	[kN]	16	27	40	64	108	110
Partial safety factor	γ_{Ms}	[-]	1,5				1,68	1,5
Pull-out								
Standard anchorage depth								
Characteristic resistance in non-cracked concrete C20/25	$N_{Rk,p}$	[kN]	12	16	25	35	1)	1)
Reduced anchorage depth								
Characteristic resistance in non-cracked concrete C20/25	$N_{Rk,p}$	[kN]	7,5	9	1)	1)	-	-
Splitting For the proof against splitting failure $N^0_{Rk,c}$ has to be replaced by $N^0_{Rk,sp}$ with consideration of the member thickness								
Standard anchorage depth								
Splitting for **standard thickness of concrete member** (The higher resistance of case 1 and case 2 may be applied; the values $s_{cr,sp}$ and $c_{cr,sp}$ may be linearly interpolated for the member thickness $h_{min,2} < h < h_{min,1}$ (Case 2); $\psi_{h,sp}$= 1,0)								
Standard thickness of concrete	$h_{min,1} \geq$	[mm]	100	120	140	160	200	250
Case 1								
Characteristic resistance in non-cracked concrete C20/25	$N^0_{Rk,sp}$	[kN]	9	12	20	30	40	-
Spacing (edge distance)	$s_{cr,sp}$ (= 2 $c_{cr,sp}$)	[mm]	3 h_{ef}					
Case 2								
Characteristic resistance in non-cracked concrete C20/25	$N^0_{Rk,sp}$	[kN]	12	16	25	35	50,5	70,6
Spacing (edge distance)	$s_{cr,sp}$ (= 2 $c_{cr,sp}$)	[mm]	230	250	280	400	440	500
Splitting for **minimum thickness of concrete member**								
Minimum thickness of concrete	$h_{min,2} \geq$	[mm]	80	100	120	140	-	-
Characteristic resistance in non-cracked concrete C20/25	$N^0_{Rk,sp}$	[kN]	12	16	25	35		
Spacing (edge distance)	$s_{cr,sp}$ (= 2 $c_{cr,sp}$)	[mm]	5 h_{ef}					
Reduced anchorage depth								
Minimum thickness of concrete	$h_{min,3} \geq$	[mm]	80	80	100	140	-	-
Characteristic resistance in non-cracked concrete C20/25	$N^0_{Rk,sp}$	[kN]	7,5	9	17,9	26,5		
Spacing (edge distance)	$s_{cr,sp}$ (= 2 $c_{cr,sp}$)	[mm]	200	200	250	300		
Increasing factor for $N_{Rk,p}$ and $N^0_{Rk,sp}$	ψ_c	[-]	$\left(\frac{f_{ck,cube}}{25}\right)^{0,5}$					
Concrete cone failure								
Effective anchorage depth	h_{ef}	[mm]	46	60	70	85	100	125
Reduced anchorage depth	$h_{ef,red}$	[mm]	35 2)	40	50	65	-	-
Factor according to CEN/TS 1992-4	k_{ucr}	[-]	10,1					

1) Pull-out is not decisive.
2) Use restricted to anchoring of structural components statically indeterminate.

Wedge Anchor BZ plus

Performance
Characteristic values for **tension loads,** BZ plus **A4** / **HCR, non-cracked concrete,** static and quasi-static action

Annex C4

electronic copy of the eta by dibt: eta-99/0010

Table C5: Characteristic values for **shear loads**, BZ plus, **cracked** and **non-cracked concrete,** static or quasi static action

Anchor size				**M8**	**M10**	**M12**	**M16**	**M20**	**M24**	**M27**
Installation safety factor		$\gamma_2 = \gamma_{inst}$	[-]	1,0						
Steel failure without lever arm, Steel zinc plated										
Characteristic shear resistance		$V_{Rk,s}$	[kN]	12,2	20,1	30	55	69	114	169,4
Factor for ductility		k_2	[-]	1,0						
Partial safety factor		γ_{Ms}	[-]	1,25				1,33	1,25	1,25
Steel failure without lever arm, Stainless steel A4, HCR										
Characteristic shear resistance		$V_{Rk,s}$	[kN]	13	20	30	55	86	123,6	-
Factor for ductility		k_2	[-]	1,0						
Partial safety factor		γ_{Ms}	[-]	1,25				1,4	1,25	
Steel failure with lever arm, Steel zinc plated										
Characteristic bending resistance		$M^0_{Rk,s}$	[Nm]	23	47	82	216	363	898	1331,5
Partial safety factor		γ_{Ms}	[-]	1,25				1,33	1,25	1,25
Steel failure with lever arm, Stainless steel A4, HCR										
Characteristic bending resistance		$M^0_{Rk,s}$	[Nm]	26	52	92	200	454	785,4	-
Partial safety factor		γ_{Ms}	[-]	1,25				1,4	1,25	
Concrete pry-out failure										
Factor k acc. to ETAG 001, Annex C or k_3 acc. to CEN/TS 1992-4		$k_{(3)}$	[-]	2,4				2,8		
Concrete edge failure										
Effective length of anchor in shear loading with $\mathbf{h_{ef}}$	Steel zinc plated	l_f	[mm]	46	60	70	85	100	115	125
	Stainless steel A4, HCR	l_f	[mm]	46	60	70	85	100	125	-
Effective length of anchor in shear loading with $\mathbf{h_{ef,red}}$	Steel zinc plated	$l_{f,red}$	[mm]	35[1)]	40	50	65	-	-	-
	Stainless steel A4, HCR	$l_{f,red}$	[mm]	35[1)]	40	50	65			
Outside diameter of anchor		d_{nom}	[mm]	8	10	12	16	20	24	27

[1)] Use restricted to anchoring of structural components statically indeterminate.

electronic copy of the eta by dibt: eta-99/0010

Table C6: Characteristic resistance for **seismic loading**, BZ plus, **standard anchorage depth,** performance category **C1** and **C2**

Anchor size			**M8**	**M10**	**M12**	**M16**	**M20**
Tension loads							
Installation safety factor	$\gamma_2 = \gamma_{inst}$	[-]	1,0				
Steel failure, Steel zinc plated							
Characteristic resistance **C1**	$N_{Rk,s,seis,C1}$	[kN]	16	27	40	60	86
Characteristic resistance **C2**	$N_{Rk,s,seis,C2}$	[kN]	16	27	40	60	86
Partial safety factor	$\gamma_{Ms,seis}$	[-]	1,53		1,5		1,6
Steel failure, Stainless steel A4, HCR							
Characteristic resistance **C1**	$N_{Rk,s,seis,C1}$	[kN]	16	27	40	64	108
Characteristic resistance **C2**	$N_{Rk,s,seis,C2}$	[kN]	16	27	40	64	108
Partial safety factor	$\gamma_{Ms,seis}$	[-]	1, 5				1,68
Pull-out (steel zinc plated, stainless steel A4 and HCR)							
Characteristic resistance **C1**	$N_{Rk,p,seis,C1}$	[kN]	5	9	16	25	36
Characteristic resistance **C2**	$N_{Rk,p,seis,C2}$	[kN]	2,3	3,6	10,2	13,8	24,4
Increasing factor for $N_{Rk,p}$	ψc	[-]	1,0				
Shear loads							
Steel failure without lever arm, Steel zinc plated							
Characteristic resistance **C1**	$V_{Rk,s,seis,C1}$	[kN]	9,3	20	27	44	69
Characteristic resistance **C2**	$V_{Rk,s,seis,C2}$	[kN]	6,7	14	16,2	35,7	55,2
Partial safety factor	$\gamma_{Ms,seis}$	[-]	1, 25				1,33
Steel failure without lever arm, Stainless steel A4, HCR							
Characteristic resistance **C1**	$V_{Rk,s,seis,C1}$	[kN]	9,3	20	27	44	69
Characteristic resistance **C2**	$V_{Rk,s,seis,C2}$	[kN]	6,7	14	16,2	35,7	55,2
Partial safety factor	$\gamma_{Ms,seis}$	[-]	1, 25				1,4

electronic copy of the eta by dibt: eta-99/0010

Table C7: Characteristic values **for tension and shear load** under **fire exposure,** BZ plus, **standard anchorage depth,** cracked and non-cracked concrete C20/25 to C50/60

Anchor size				**M8**	**M10**	**M12**	**M16**	**M20**	**M24**	**M27**
Tension load										
Steel failure										
Steel, galvanised										
Characteristic resistance	R30	$N_{Rk,s,fi}$	[kN]	1,5	2,6	4,1	7,7	9,4	13,6	17,6
	R60			1,1	1,9	3,0	5,6	8,2	11,8	15,3
	R90			0,8	1,4	2,4	4,4	6,9	10,0	13,0
	R120			0,7	1,2	2,2	4,0	6,3	9,1	11,8
Stainless steel A4, HCR										
Characteristic resistance	R30	$N_{Rk,s,fi}$	[kN]	3,8	6,9	12,7	23,7	33,5	48,2	-
	R60			2,9	5,3	9,4	17,6	25,0	35,9	
	R90			2,0	3,6	6,1	11,5	16,4	23,6	
	R120			1,6	2,8	4,5	8,4	12,1	17,4	
Shear load										
Steel failure without lever arm										
Steel, galvanised										
Characteristic resistance	R30	$V_{Rk,s,fi}$	[kN]	1,6	2,6	4,1	7,7	11	16	20,6
	R60			1,5	2,5	3,6	6,8	11	15	19,8
	R90			1,2	2,1	3,5	6,5	10	15	19,0
	R120			1,0	2,0	3,4	6,4	10	14	18,6
Stainless steel A4, HCR										
Characteristic resistance	R30	$V_{Rk,s,fi}$	[kN]	3,8	6,9	12,7	23,7	33,5	48,2	-
	R60			2,9	5,3	9,4	17,6	25,0	35,9	
	R90			2,0	3,6	6,1	11,5	16,4	23,6	
	R120			1,6	2,8	4,5	8,4	12,1	17,4	
Steel failure with lever arm										
Steel, galvanised										
Characteristic resistance	R30	$M^0_{Rk,s,fi}$	[Nm]	1,7	3,3	6,4	16,3	29	50	75
	R60			1,6	3,2	5,6	14	28	48	72
	R90			1,2	2,7	5,4	14	27	47	69
	R120			1,1	2,5	5,3	13	26	46	68
Stainless steel A4, HCR										
Characteristic resistance	R30	$M^0_{Rk,s,fi}$	[Nm]	3,8	9,0	19,7	50,1	88,8	153,5	-
	R60			2,9	6,8	14,6	37,2	66,1	114,3	
	R90			2,1	4,7	9,5	24,2	43,4	75,1	
	R120			1,6	3,6	7,0	17,8	32,1	55,5	

The characteristic resistance for pull-out failure, concrete cone failure, concrete pry-out and concrete edge failure can be calculated according to TR020 / CEN/TS 1992-4. If pull-out is not decisive in Eq. 2.4 and Eq. 2.5, TR 020 $N_{Rk,p}$ must be replaced by $N^0_{Rk,c}$.

Wedge Anchor BZ plus

Performance
Characteristic values **for tension and shear load** under **fire exposure,** BZ plus, **standard anchorage depth**, cracked and non-cracked concrete C20/25 to C50/60

Annex C7

electronic copy of the eta by dibt: eta-99/0010

Table C8: Characteristic values **for tension and shear load** under **fire exposure,** BZ plus, **reduced anchorage depth,** cracked and non-cracked concrete C20/25 to C50/60

Anchor size				**M8**	**M10**	**M12**	**M16**
Tension load							
Steel failure							
Steel, galvanised							
Characteristic resistance	R30	$N_{Rk,s,fi}$	[kN]	1,5	2,6	4,1	7,7
	R60			1,1	1,9	3,0	5,6
	R90			0,8	1,3	1,9	3,5
	R120			0,6	1,0	1,3	2,5
Stainless steel A4, HCR							
Characteristic resistance	R30	$N_{Rk,s,fi}$	[kN]	3,2	6,9	12,7	23,7
	R60			2,5	5,3	9,4	17,6
	R90			1,9	3,6	6,1	11,5
	R120			1,6	2,8	4,5	8,4
Shear load							
Steel failure without lever arm							
Steel, galvanised							
Characteristic resistance	R30	$V_{Rk,s,fi}$	[kN]	1,5	2,6	4,1	7,7
	R60			1,1	1,9	3,0	5,6
	R90			0,8	1,3	1,9	3,5
	R120			0,6	1,0	1,3	2,5
Stainless steel A4, HCR							
Characteristic resistance	R30	$V_{Rk,s,fi}$	[kN]	3,2	6,9	12,7	23,7
	R60			2,5	5,3	9,4	17,6
	R90			1,9	3,6	6,1	11,5
	R120			1,6	2,8	4,5	8,4
Steel failure with lever arm							
Steel, galvanised							
Characteristic resistance	R30	$M^0_{Rk,s,fi}$	[Nm]	1,5	3,3	6,4	16,3
	R60			1,2	2,5	4,7	11,9
	R90			0,8	1,7	3,0	7,5
	R120			0,6	1,2	2,1	5,3
Stainless steel A4, HCR							
Characteristic resistance	R30	$M^0_{Rk,s,fi}$	[Nm]	3,2	8,9	19,7	50,1
	R60			2,6	6,8	14,6	37,2
	R90			2,0	4,7	9,5	24,2
	R120			1,6	3,6	7,0	17,8

The characteristic resistance for pull-out failure, concrete cone failure, concrete pry-out and concrete edge failure can be calculated according to TR020 / CEN/TS 1992-4. If pull-out is not decisive in Eq. 2.4 and Eq. 2.5, TR 020 $N_{Rk,p}$ must be replaced by $N^0_{Rk,c}$.

Wedge Anchor BZ plus

Performance
Characteristic values **for tension and shear load** under **fire exposure,** BZ plus, **reduced anchorage depth**, cracked and non-cracked concrete C20/25 to C50/60

Annex C8

electronic copy of the eta by dibt: eta-99/0010

Table C9: Displacements under tension load, BZ plus

Anchor size			M8	M10	M12	M16	M20	M24	M27
Standard anchorage depth									
Steel zinc plated									
Tension load in cracked concrete	N	[kN]	2,4	4,3	7,6	11,9	17,1	21,1	24
Displacement	δ_{N0}	[mm]	0,6	1,0	0,4	1,0	0,9	0,7	0,9
	$\delta_{N\infty}$	[mm]	1,4	1,2	1,4	1,3	1,0	1,2	1,4
Tension load in non-cracked concrete	N	[kN]	5,7	7,6	11,9	16,7	23,8	29,6	34
Displacement	δ_{N0}	[mm]	0,4	0,5	0,7	0,3	0,4	0,5	0,3
	$\delta_{N\infty}$	[mm]	0,8		1,4	0,8			1,4
Displacements under seismic tension loads **C2**									
Displacements for DLS	$\delta_{N,seis,C2(DLS)}$	[mm]	2,3	4,1	4,9	3,6	5,1	-	-
Displacements for ULS	$\delta_{N,seis,C2(ULS)}$	[mm]	8,2	13,8	15,7	9,5	15,2		
Stainless steel A4, HCR									
Tension load in cracked concrete	N	[kN]	2,4	4,3	7,6	11,9	17,1	19,0	-
Displacement	δ_{N0}	[mm]	0,7	1,8	0,4	0,7	0,9	0,5	
	$\delta_{N\infty}$	[mm]	1,2	1,4	1,4	1,4	1,0	1,8	
Tension load in non-cracked concrete	N	[kN]	5,8	7,6	11,9	16,7	23,8	33,5	-
Displacement	δ_{N0}	[mm]	0,6	0,5	0,7	0,2	0,4	0,5	
	$\delta_{N\infty}$	[mm]	1,2	1,0	1,4	0,4	0,8	1,1	
Displacements under seismic tension loads **C2**									
Displacements for DLS	$\delta_{N,seis,C2(DLS)}$	[mm]	2,3	4,1	4,9	3,6	5,1	-	-
Displacements for ULS	$\delta_{N,seis,C2(ULS)}$	[mm]	8,2	13,8	15,7	9,5	15,2		
Reduced anchorage depth									
Steel zinc plated, stainless steel A4, HCR									
Tension load in cracked concrete	N	[kN]	2,4	3,6	6,1	9,0	-	-	-
Displacement	δ_{N0}	[mm]	0,8	0,7	0,5	1,0			
	$\delta_{N\infty}$	[mm]	1,2	1,0	0,8	1,1			
Tension load in non-cracked concrete	N	[kN]	3,7	4,3	8,5	12,6	-	-	-
Displacement	δ_{N0}	[mm]	0,1	0,2	0,2	0,2			
	$\delta_{N\infty}$	[mm]	0,7	0,7	0,7	0,7			

electronic copy of the eta by dibt: eta-99/0010

Table C10: Displacements under shear load, BZ plus

Anchor size			M8	M10	M12	M16	M20	M24	M27
Standard anchorage depth									
Steel zinc plated									
Shear load in cracked and non-cracked concrete	V	[kN]	6,9	11,4	17,1	31,4	36,8	64,9	96,8
Displacement	δ_{V0}	[mm]	2,0	3,2	3,6	3,5	1,8	3,5	3,6
	$\delta_{V\infty}$	[mm]	3,0	4,7	5,5	5,3	2,7	5,3	5,4
Displacements under seismic shear loads **C2**									
Displacements for DLS	$\delta_{V,seis,C2(DLS)}$	[mm]	3,0	2,7	3,5	4,3	4,7	-	-
Displacements for ULS	$\delta_{V,seis,C2(ULS)}$	[mm]	5,9	5,3	9,5	9,6	10,1		
Stainless steel A4, HCR									
Shear load in cracked and non-cracked concrete	V	[kN]	7,3	11,4	17,1	31,4	43,8	70,6	-
Displacement	δ_{V0}	[mm]	1,9	2,4	4,0	4,3	2,9	2,8	
	$\delta_{V\infty}$	[mm]	2,9	3,6	5,9	6,4	4,3	4,2	
Displacements under seismic shear loads **C2**									
Displacements for DLS	$\delta_{V,seis,C2(DLS)}$	[mm]	3,0	2,7	3,5	4,3	4,7	-	-
Displacements for ULS	$\delta_{V,seis,C2(ULS)}$	[mm]	5,9	5,3	9,5	9,6	10,1		
Reduced anchorage depth									
Steel zinc plated									
Shear load in cracked and non-cracked concrete	V	[kN]	6,9	11,4	17,1	31,4	-	-	-
Displacement	δ_{V0}	[mm]	2,0	3,2	3,6	3,5			
	$\delta_{V\infty}$	[mm]	3,0	4,7	5,5	5,3			
Stainless steel A4, HCR									
Shear load in cracked and non-cracked concrete	V	[kN]	7,3	11,4	17,1	31,4	-	-	-
Displacement	δ_{V0}	[mm]	1,9	2,4	4,0	4,3			
	$\delta_{V\infty}$	[mm]	2,9	3,6	5,9	6,4			

electronic copy of the eta by dibt: eta-99/0010

Wedge Anchor BZ plus

Performance
Displacements under shear load

Annex C10

Table C11: Characteristic values for **tension loads, BZ-IG, cracked concrete,** static and quasi-static action

Anchor size			**M6**	**M8**	**M10**	**M12**
Installation safety factor	$\gamma_2 = \gamma_{inst}$	[-]	1,2			
Steel failure						
Characteristic tension resistance, **steel zinc plated**	$N_{Rk,s}$	[kN]	16,1	22,6	26,0	56,6
Partial safety factor	γ_{Ms}	[-]	1,5			
Characteristic tension resistance, **stainless steel A4, HCR**	$N_{Rk,s}$	[kN]	14,1	25,6	35,8	59,0
Partial safety factor	γ_{Ms}	[-]	1,87			
Pull-out failure						
Characteristic resistance in cracked concrete C20/25	$N_{Rk,p}$	[kN]	5	9	12	20
Increasing factor	ψ_c	[-]	$\left(\frac{f_{ck,cube}}{25}\right)^{0,5}$			
Concrete cone failure						
Effective anchorage depth	h_{ef}	[mm]	45	58	65	80
Factor according to CEN/TS 1992-4	k_{cr}	[-]	7,2			

electronic copy of the eta by dibt: eta-99/0010

Table C12: Characteristic values for **tension loads, BZ-IG, non-cracked concrete,** static and quasi-static action

Anchor size			**M6**	**M8**	**M10**	**M12**
Installation safety factor	$\gamma_2 = \gamma_{inst}$	[-]	1,2			
Steel failure						
Characteristic tension resistance, **steel zinc plated**	$N_{Rk,s}$	[kN]	16,1	22,6	26,0	56,6
Partial safety factor	γ_{Ms}	[-]	1,5			
Characteristic tension resistance, **stainless steel A4, HCR**	$N_{Rk,s}$	[kN]	14,1	25,6	35,8	59,0
Partial safety factor	γ_{Ms}	[-]	1,87			
Pull-out						
Characteristic resistance in non-cracked concrete C20/25	$N_{Rk,p}$	[kN]	12	16	20	30
Splitting ($N^0_{Rk,c}$ has to be replaced by $N^0_{Rk,sp}$. The higher resistance of Case 1 and Case 2 may be applied.)						
Minimum thickness of concrete member	h_{min}	[mm]	100	120	130	160
Case 1						
Characteristic resistance in non-cracked concrete C20/25	$N^0_{Rk,sp}$	[kN]	9	12	16	25
Spacing (edge distance)	$s_{cr,sp}$ (= 2 $c_{cr,sp}$)	[mm]	3 h_{ef}			
Case 2						
Characteristic resistance in non-cracked concrete C20/25	$N^0_{Rk,sp}$	[kN]	12	16	20	30
Spacing (edge distance)	$s_{cr,sp}$ (= 2 $c_{cr,sp}$)	[mm]	5 h_{ef}			
Increasing factor for $N_{Rk,p}$ and $N^0_{Rk,sp}$	ψ_c	[-]	$\left(\frac{f_{ck,cube}}{25}\right)^{0,5}$			
Concrete cone failure						
Effective anchorage depth	h_{ef}	[mm]	45	58	65	80
Factor according to CEN/TS 1992-4	k_{ucr}	[-]	10,1			

electronic copy of the eta by dibt: eta-99/0010

Table C13: Characteristic values for **shear loads, BZ-IG, cracked and non-cracked concrete,** static and quasi-static action

Anchor size			**M6**	**M8**	**M10**	**M12**
Installation safety factor	$\gamma_2 = \gamma_{inst}$	[-]	1,0			
BZ-IG, steel zinc plated						
Steel failure without lever arm, Installation type V						
Characteristic shear resistance	$V_{Rk,s}$	[kN]	5,8	6,9	10,4	25,8
Steel failure without lever arm, Installation type D						
Characteristic shear resistance	$V_{Rk,s}$	[kN]	5,1	7,6	10,8	24,3
Steel failure with lever arm, Installation type V						
Characteristic bending resistance	$M^0_{Rk,s}$	[Nm]	12,2	30,0	59,8	104,6
Steel failure with lever arm, Installation type D						
Characteristic bending resistance	$M^0_{Rk,s}$	[Nm]	36,0	53,2	76,0	207
Partial safety factor for $V_{Rk,s}$ and $M^0_{Rk,s}$	γ_{Ms}	[-]	1,25			
Factor of ductility	k_2	[-]	1,0			
BZ-IG, stainless steel A4, HCR						
Steel failure without lever arm, Installation type V						
Characteristic shear resistance	$V_{Rk,s}$	[kN]	5,7	9,2	10,6	23,6
Partial safety factor	γ_{Ms}	[-]	1,25			
Steel failure without lever arm, Installation type D						
Characteristic shear resistance	$V_{Rk,s}$	[kN]	7,3	7,6	9,7	29,6
Partial safety factor	γ_{Ms}	[-]	1,25			
Steel failure with lever arm, Installation type V						
Characteristic bending resistance	$M^0_{Rk,s}$	[Nm]	10,7	26,2	52,3	91,6
Partial safety factor	γ_{Ms}	[-]	1,56			
Steel failure with lever arm, Installation type D						
Characteristic bending resistance	$M^0_{Rk,s}$	[Nm]	28,2	44,3	69,9	191,2
Partial safety factor	γ_{Ms}	[-]	1,25			
Factor of ductility	k_2	[-]	1,0			
Concrete pry-out failure						
Factor k acc. to ETAG 001, Annex C or k_3 acc. to CEN/TS 1992-4	$k_{(3)}$	[-]	1,5	1,5	2,0	2,0
Concrete edge failure						
Effective length of anchor in shear loading	l_f	[mm]	45	58	65	80
Effective diameter of anchor	d_{nom}	[mm]	8	10	12	16

electronic copy of the eta by dibt: eta-99/0010

Table C14: Characteristic values for **tension** and **shear load** under **fire exposure, BZ-IG,** cracked and non-cracked concrete C20/25 to C50/60

Anchor size				M6	M8	M10	M12
Tension load							
Steel failure							
Steel zinc plated							
Characteristic resistance	R30	$N_{Rk,s,fi}$	[kN]	0,7	1,4	2,5	3,7
	R60			0,6	1,2	2,0	2,9
	R90			0,5	0,9	1,5	2,2
	R120			0,4	0,8	1,3	1,8
Stainless steel A4, HCR							
Characteristic resistance	R30	$N_{Rk,s,fi}$	[kN]	2,9	5,4	8,7	12,6
	R60			1,9	3,8	6,3	9,2
	R90			1,0	2,1	3,9	5,7
	R120			0,5	1,3	2,7	4,0
Shear load							
Steel failure without lever arm							
Steel zinc plated							
Characteristic resistance	R30	$V_{Rk,s,fi}$	[kN]	0,7	1,4	2,5	3,7
	R60			0,6	1,2	2,0	2,9
	R90			0,5	0,9	1,5	2,2
	R120			0,4	0,8	1,3	1,8
Stainless steel A4, HCR							
Characteristic resistance	R30	$V_{Rk,s,fi}$	[kN]	2,9	5,4	8,7	12,6
	R60			1,9	3,8	6,3	9,2
	R90			1,0	2,1	3,9	5,7
	R120			0,5	1,3	2,7	4,0
Steel failure with lever arm							
Steel zinc plated							
Characteristic resistance	R30	$M^0_{Rk,s,fi}$	[Nm]	0,5	1,4	3,3	5,7
	R60			0,4	1,2	2,6	4,6
	R90			0,4	0,9	2,0	3,4
	R120			0,3	0,8	1,6	2,8
Stainless steel A4, HCR							
Characteristic resistance	R30	$M^0_{Rk,s,fi}$	[Nm]	2,2	5,5	11,2	19,6
	R60			1,5	3,9	8,1	14,3
	R90			0,7	2,2	5,1	8,9
	R120			0,4	1,3	3,5	6,2

The characteristic resistance for pull-out failure, concrete cone failure, concrete pry-out failure and concrete edge failure can be designed according to TR020 / CEN/TS 1992-4.

electronic copy of the eta by dibt: eta-99/0010

Wedge Anchor BZ-IG

Performance
Characteristic values for **tension** and **shear loads** under **fire exposure, BZ-IG** cracked and non-cracked concrete C20/25 to C50/60

Annex C14

Table C15: Displacements under tension load, BZ-IG

Anchor size			M6	M8	M10	M12
Tension load in cracked concrete	N	[kN]	2,0	3,6	4,8	8,0
Displacements	δ_{N0}	[mm]	0,6	0,6	0,8	1,0
	$\delta_{N\infty}$	[mm]	0,8	0,8	1,2	1,4
Tension load in non-cracked concrete	N	[kN]	4,8	6,4	8,0	12,0
Displacements	δ_{N0}	[mm]	0,4	0,5	0,7	0,8
	$\delta_{N\infty}$	[mm]	0,8	0,8	1,2	1,4

Table C16: Displacements under shear load, BZ-IG

Anchor size			M6	M8	M10	M12
Shear load in cracked and non-cracked concrete	V	[kN]	4,2	5,3	6,2	16,9
Displacements	δ_{V0}	[mm]	2,8	2,9	2,5	3,6
	$\delta_{V\infty}$	[mm]	4,2	4,4	3,8	5,3

electronic copy of the eta by dibt: eta-99/0010