Deutsches Institut für Bautechnik DIBt

Member of EOTA
www.eota.eu

Approval body for construction products and types of construction

Bautechnisches Prüfamt

An institution established by the Federal and Laender Governments

Designated according to Article 29 of Regulation (EU) No 305/2011 and member of EOTA (European Organisation for Technical Assessment)

European Technical Assessment

ETA-10/0060 of 12 July 2017

English translation prepared by DIBt - Original version in German language

General Part

Technical Assessment Body issuing the European Technical Assessment:	Deutsches Institut für Bautechnik
Trade name of the construction product	Tecfi HVE Rock
Product family to which the construction product belongs	Torque controlled expansion anchor for use in concrete
Manufacturer	Tecfi S.p.A Strada Statale Appia, Km. 193 81050 PASTORANO (CE) ITALIEN
Manufacturing plant	Tecfi S.p.A. Italy
This European Technical Assessment contains	16 pages including 3 annexes which form an integral part of this assessment
This European Technical Assessment is issued in accordance with Regulation (EU) No 305/2011, on the basis of	European Assessment Document (EAD) 330232-00-0601
This version replaces	ETA-10/0060 issued on 11 June 2015

electronic copy of the eta by dibt: eta-10/0060

Deutsches Institut für Bautechnik
Kolonnenstraße 30 B | 10829 Berlin | GERMANY | Phone: +49 30 78730-0 | Fax: +49 30 78730-320 | Email: dibt@dibt.de | www.dibt.de

The European Technical Assessment is issued by the Technical Assessment Body in its official language. Translations of this European Technical Assessment in other languages shall fully correspond to the original issued document and shall be identified as such.

Communication of this European Technical Assessment, including transmission by electronic means, shall be in full. However, partial reproduction may only be made with the written consent of the issuing Technical Assessment Body. Any partial reproduction shall be identified as such.

This European Technical Assessment may be withdrawn by the issuing Technical Assessment Body, in particular pursuant to information by the Commission in accordance with Article 25(3) of Regulation (EU) No 305/2011.

electronic copy of the eta by dibt: eta-10/0060

Specific Part

1 Technical description of the product

The Tecfi HVE Rock is an anchor made of galvanised steel of sizes M6, M8, M10, M12 and M16 which is placed into a drilled hole and anchored by torque-controlled expansion.

The product description is given in Annex A.

2 Specification of the intended use in accordance with the applicable European Assessment Document

The performances given in Section 3 are only valid if the anchor is used in compliance with the specifications and conditions given in Annex B.

The verifications and assessment methods on which this European Technical Assessment is based lead to the assumption of a working life of the anchor of at least 50 years. The indications given on the working life cannot be interpreted as a guarantee given by the producer, but are to be regarded only as a means for choosing the right products in relation to the expected economically reasonable working life of the works.

3 Performance of the product and references to the methods used for its assessment

3.1 Mechanical resistance and stability (BWR 1)

Essential characteristic	Performance
Characteristic resistance for static and quasi static action and seismic performance category C1 and C2	See Annex C 1 / C 2
Displacements	See Annex C 5

3.2 Safety in case of fire (BWR 2)

Essential characteristic	Performance
Reaction to fire	Anchorages satisfy requirements for Class A1
Resistance to fire	See Annex C 3 / C 4

4 Assessment and verification of constancy of performance (AVCP) system applied, with reference to its legal base

In accordance with European Assessment Documents EAD No. 330232-00-0601 the applicable European legal act is: [96/582/EC].

The system to be applied is: 1

electronic copy of the eta by dibt: eta-10/0060

5 Technical details necessary for the implementation of the AVCP system, as provided for in the applicable European Assessment Document

Technical details necessary for the implementation of the AVCP system are laid down in the control plan deposited at Deutsches Institut für Bautechnik.

Issued in Berlin on 12 July 2017 by Deutsches Institut für Bautechnik

Andreas Kummerow
Head of Department

beglaubigt:
Baderschneider

electronic copy of the eta by dibt: eta-10/0060

Installed conditions

Installation for static, quasi-static and seismic performance category C1 and C2

HVE01

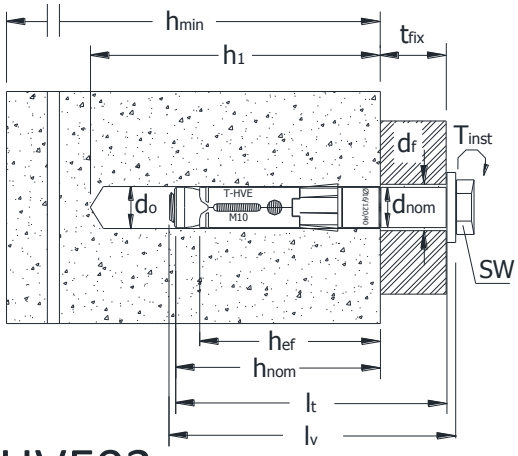

HVE02

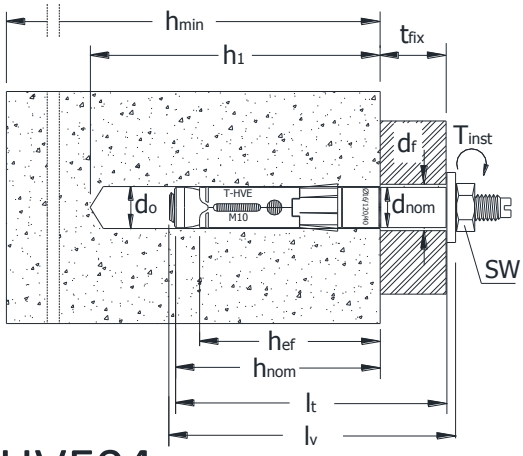

HVE03

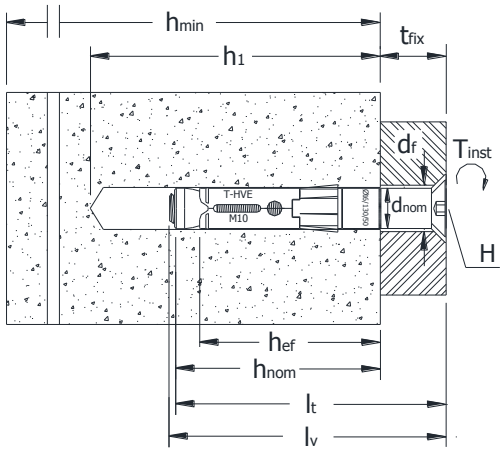

HVE04

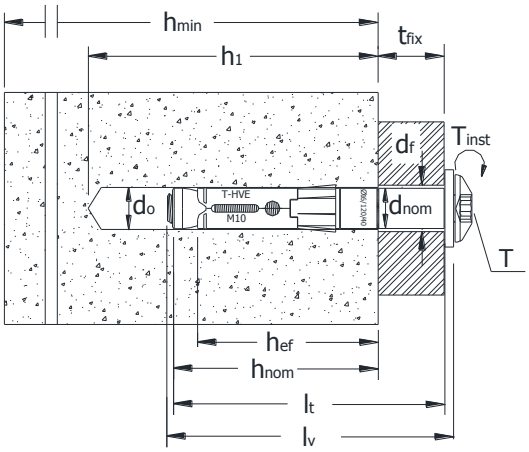

Designation

d_{nom}	Outside diameter of the anchor
T_{inst}	Required torque moment
t_{fix}	Thickness of the fixtures
d_0	Diameter of the drill hole
d_f	Diameter of the clearance hole in the fixture
h_{min}	Minimum thickness of the concrete member
h_{nom}	Overall anchor embedment depth
h_{ef}	Anchorage depth
l_t	Anchor length
l_v	Bolt lenght
T	Hexalobular socket number
SW	Wrench size/Socket size
H	Hexagonal socket

Tecfi HVE Rock

Product description
Installed condition

Annex A 1

electronic copy of the eta by dibt: eta-10/0060

Anchor type HVE01 with hexagonal head screw

HVE01

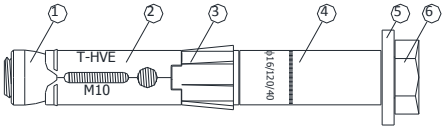

Anchor type HVE02 with threaded stud

HVE02

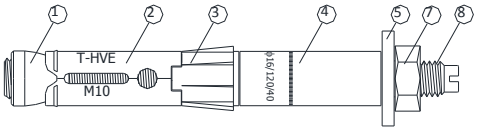

Anchor type HVE03 with flat countersunk head screw

HVE03

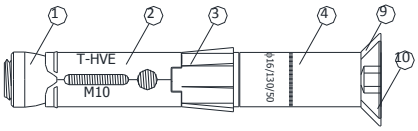

Anchor type HVE04 with mushroom head screw

HVE04

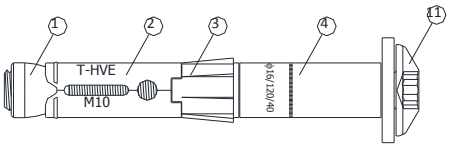

Table A1: Materials

ITEM	Description	Finishing
1	Zinc plated conical steel nut	Materials galvanised ≥ 5 [µm] according to ISO 4042:1999
2	Zinc plated expansion steel sleeve (marking: T-HVE / bolt size, e.g. M10)	
3	Nylon cylinder with helix, red brick color	
4	Zinc plated steel extension (marking: $d_{nom}/l_t/t_{fix}$, e.g. Ø16/120/40)	
5	Zinc plated steel washer	
6	Zinc plated steel hexagonal head bolt, class 8.8 according to ISO 898-1:2012	
7	Zinc plated steel hexagonal nut, class 8 according to ISO 898-2:2012	
8	Zinc plated steel threaded stud, class 8.8 according to ISO 898-1:2012	
9	Zinc plated steel countersunk washer, according to EN 10083:2006	
10	Zinc plated steel flat countersunk head screw, class 8.8 accc.to ISO 898-1:2012	
11	Zinc plated steel mushroom head screw, class 8.8 according to ISO 898-1:2012	

Tecfi HVE Rock

Product description
Anchor types and components

Annex A 2

electronic copy of the eta by dibt: eta-10/0060

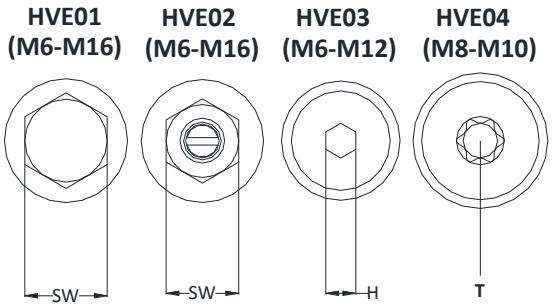

Table A2: HVE01 dimensions

Item	Outside diameter of anchor [mm]	Outside diameter of metric thread [mm]	Length range [mm]	Maximum thickness of fixture range [mm]
HVE01-M6	10	6	70 - 200	5 - 135
HVE01-M8	12	8	80 - 200	10 - 130
HVE01-M10	16	10	90 - 200	10 - 120
HVE01-M12	18	12	110 – 250	10 - 150
HVE01-M16	24	16	130 – 300	10 - 180

Table A3: HVE02 dimensions

Item	Outside diameter of anchor [mm]	Outside diameter of metric thread [mm]	Length range [mm]	Maximum thickness of fixture range [mm]
HVE02-M6	10	6	70 - 200	5 - 135
HVE02-M8	12	8	80 - 200	10 - 130
HVE02-M10	16	10	90 - 200	10 - 120
HVE02-M12	18	12	110 – 250	10 - 150
HVE02-M16	24	16	130 – 300	10 - 180

Table A4: HVE03 dimensions

Item	Outside diameter of anchor [mm]	Outside diameter of metric thread [mm]	Length range [mm]	Maximum thickness of fixture range [mm]
HVE03-M6	10	6	70 - 205	5 - 140
HVE03-M8	12	8	85 - 205	15 - 135
HVE03-M10	16	10	100 - 200	20 - 120
HVE03-M12	18	12	120 - 200	20 - 100

Table A5: HVE04 dimensions

Item	Outside diameter of anchor [mm]	Outside diameter of metric thread [mm]	Length range [mm]	Maximum thickness of fixture range [mm]
HVE04-M8	12	8	80 - 200	10 - 130
HVE04-M10	16	10	100 - 200	20 - 120

electronic copy of the eta by dibt: eta-10/0060

Tecfi HVE Rock

Product description
Anchor's dimensions

Annex A 3

Specifications of intended use

Anchorages subject to:
- Static and quasi-static loads: all sizes
- Seismic action for Performance Category C1: all sizes
- Seismic action for Performance Category C2: all sizes
- Resistance to fire exposure: all sizes

Base materials:
- Reinforced or unreinforced normal weight concrete according to EN 206-1:2000.
- Strength classes C20/25 to C50/60 according to EN 206-1:2000.
- Non-cracked or cracked concrete

Use conditions (Environmental conditions):
- Anchorages subject to dry internal conditions

Design:
- Anchorages are designed under the responsibility of an engineer experienced in anchorages and concrete work.
- Verifiable calculation notes and drawings are prepared taking account of the loads to be anchored. The position of the anchor is indicated on the design drawings (e.g. position of the anchor relative to reinforcement or to supports, etc.).
- Design of fastenings in accordance to FprEN 1992-4:2016 and EOTA Technical Report TR 055

Installation:
- Hole drilling by rotary plus hammer mode
- Anchor installation carried out by appropriately qualified personnel and under the supervision of the person responsible for technical matters of the site.
- In case of aborted hole: new drilling at a minimum distance away of twice the depth of the aborted hole or smaller distance if the aborted hole is filled with high strength mortar and if under shear or oblique tension load it is not the direction of the load application.

electronic copy of the eta by dibt: eta-10/0060

Table B1: Installation parameters

Parameter		HVE M6	HVE M8	HVE M10	HVE M12	HVE M16
Nominal drill hole diameter	d_o = [mm]	10	12	16	18	24
Cutting diameter of drill bit	$d_{cut} \leq$ [mm]	10,45	12,50	16,50	18,50	24,55
Effective anchorage depth	h_{ef} = [mm]	55	60	70	90	105
Depth of drill hole	h_1 = [mm]	80	90	100	120	140
Diameter of clearance in the fixture	d_f = [mm]	12	14	18	20	26
Overall anchor embedment depth in the	h_{nom} = [mm]	65	70	80	100	120
Required torque moment	T_{inst} = [Nm]	15	30	50	100	160
Outside diameter of anchor	d_{nom} = [mm]	10	12	16	18	24
Minimum thickness of concrete member	h_{min} = [mm]	110	120	140	180	210
Minimum edge distance	c_{min} = [mm]	70	100	90	175	180
	s ≥ [mm]	110	160	175	255	290
Minimum spacing	s_{min} = [mm]	55	110	80	135	130
	c ≥ [mm]	110	145	120	220	240

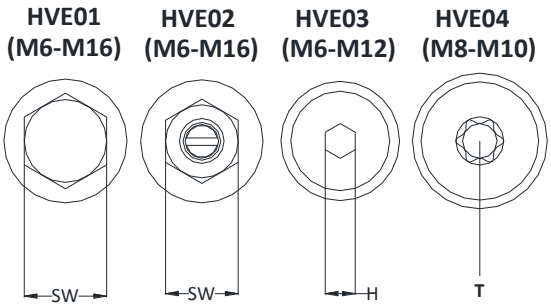

Table B2: Wrenches, sockets and maximum thickness of fixture

Item		M6	M8	M10	M12	M16
HVE 01 – Wrench size	SW = [mm]	10	13	17	19	24
Thickness of fixture	$t_{fix,max}$ = [mm]	55	70	80	100	100
	$t_{fix,min}$ = [mm]	5	10	20	20	20
HVE 02 – Wrench size	SW = [mm]	10	13	17	19	24
Thickness of fixture	$t_{fix,max}$ = [mm]	55	70	80	100	100
	$t_{fix,min}$ = [mm]	5	10	20	20	20
HVE 03 – Hexagonal socket size	H = [mm]	4	5	6	8	-
Thickness of fixture	$t_{fix,max}$ = [mm]	60	55	50	100	-
	$t_{fix,min}$ = [mm]	20	15	30	20	-
HVE 04 – Hexalobular socket number	T = [-]	-	40	40	-	-
Thickness of fixture	$t_{fix,max}$ = [mm]	-	50	40	-	-
	$t_{fix,min}$ = [mm]	-	10	20	-	-

electronic copy of the eta by dibt: eta-10/0060

Tecfi HVE Rock

Intended use
Installation parameters

Annex B 2

Drill bit

Anchor size	Drill bit item code
M6 / Ø10	EO 01 08 210
M8 / Ø12	EO 01 10 210
M10 / Ø16	EO 01 16 210
M12 / Ø18	EO 01 18 210
M16 / Ø24	EO 01 24 210

Blowing pump

Item code: DW 01 00 001

electronic copy of the eta by dibt: eta-10/0060

Tecfi HVE Rock

Intended use
Cleaning and setting tools

Annex B 3

Installation sequence HVE01

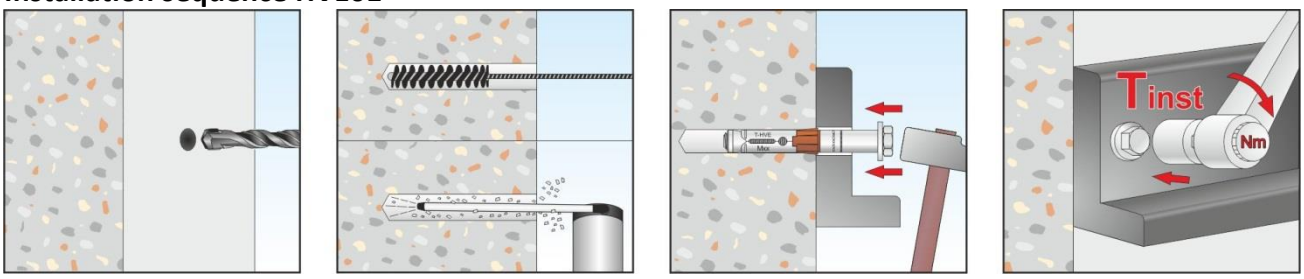

Installation sequence HVE02

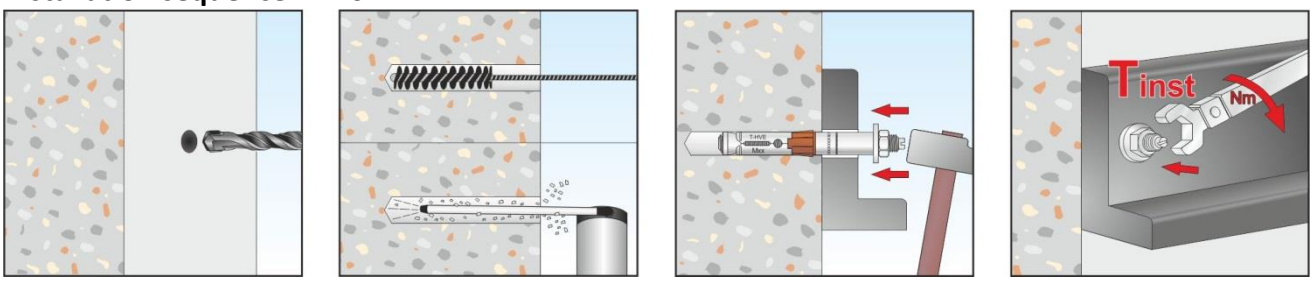

Installation sequence HVE03

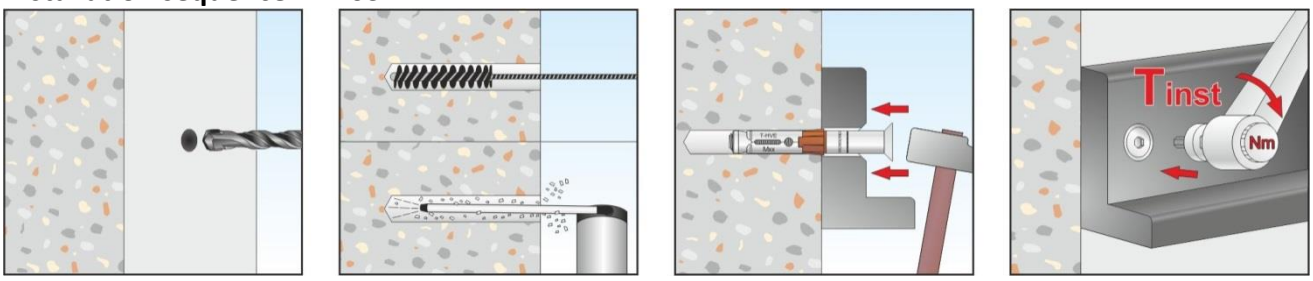

Installation sequence HVE04

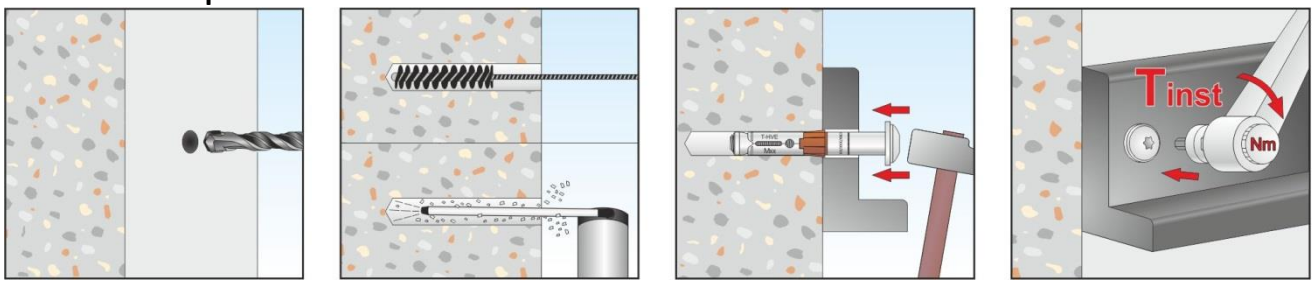

Step 1	Drill a hole into the concrete in rotary plus hammer mode
Step 2	Remove the dust into the hole using a 4 times a brush and 4 times a blowing pump
Step 3	Place the fixture and hammer the anchor in the drill hole
Step 4	Apply the required torque moment

electronic copy of the eta by dibt: eta-10/0060

Tecfi HVE Rock

Intended use
Installation instructions

Annex B 4

Table C1: Performances for design, tension

Type of anchor / Size			HVE M6	HVE M8	HVE M10	HVE M12	HVE M16
Steel Failure							
Characteristic Resistance	$N_{Rk,s}$ $N_{Rk,s,eq,C1}$ $N_{Rk,s,eq,C2}$	[kN]	16	29	46	67	125
Partial safety factor	γ_{Ms} [1)]	[-]	1,5				
Pull-out failure							
Effective embedment depth	h_{ef}	[mm]	55	60	70	90	105
Characteristic Resistance in uncracked concrete C20/25	$N_{Rk,p}$	[kN]	16	16	20	35	45
Characteristic Resistance in cracked concrete C20/25	$N_{Rk,p}$	[kN]	5	6	16	25	35
Characteristic Resistance for seismic performance category C1	$N_{Rk,p,eq}$	[kN]	5	4,2	14,4	25	35
Characteristic Resistance for seismic performance category C2	$N_{Rk,p,eq}$	[kN]	3,9	4,2	11,7	18,5	31
Increasing factors for $N_{Rk,p}$ for cracked and uncracked concrete	Ψ_c	C30/37	1,22				
		C40/50	1,41				
		C50/60	1,58				
Installation safety factor	γ_{inst}	[-]	1,0				
Concrete cone failure and splitting failure							
Effective embedment depth	h_{ef}	[mm]	55	60	70	90	105
Factor for k_1	$k_{ucr,N}$	[-]	11,0				
Factor for k_1	$k_{cr,N}$	[-]	7,7				
Spacing	$s_{cr,N}$	[mm]	165	180	210	270	315
Edge distance	$c_{cr,N}$	[mm]	85	90	105	135	160
Spacing(splitting)	$s_{cr,sp}$	[mm]	220	320	240	370	390
Edge distance (splitting)	$c_{cr,sp}$	[mm]	110	160	120	185	195
Installation safety factor	γ_{inst}	[-]	1,0				

[1)] In absence of other national regulations.

electronic copy of the eta by dibt: eta-10/0060

Tecfi HVE Rock

Performances
Characteristic resistance to tension loads

Annex C 1

Table C2: Performances for design, shear

Type of anchor / Size			HVE M6	HVE M8	HVE M10	HVE M12	HVE M16
Steel Failure without level arm							
Characteristic Resistance	$V_{Rk,s}$	[kN]	16	25	43	58	107
Characteristic Resistance for seismic performance category C1	$V_{Rk,s,eq}$	[kN]	11,4	17	28	43,5	96,3
Characteristic Resistance for seismic performance category C2	$V_{Rk,s,eq}$	[kN]	6,0	10,7	23,2	40,6	74,9
Partial safety factor	γ_{Ms} [1)]	[-]	1,45				
Steel Failure with level arm							
Characteristic bending moment	$M^0_{Rk,s}$	[Nm]	12	30	60	105	266
Ductility factor	k_7	[-]	0,8				
Partial safety factor	γ_{Ms} [1)]	[-]	1,45				
Concete pryout failure							
Effective embedmen depth	h_{ef}	[mm]	55	60	70	90	105
Factor for pryout failure	k_8	[-]	1	2	2	2	2
Installation safety factor	γ_{inst}	[-]	1,0				
Concrete edge failure							
Effective achorage legth	l_{ef}	[mm]	55	60	70	90	105
Effective external diameter anchor	d_{nom}	[mm]	10	12	16	18	24
Installation safety factor	γ_{inst}	[-]	1,0				

[1)] In absence of other national regulations.

electronic copy of the eta by dibt: eta-10/0060

Table C3: Performances under fire exposure in concrete C20/25 to C50/60 (tension)

Duration of fire resistance = 30min, anchor type HVE			**M6**	**M8**	**M10**	**M12**	**M16**
Steel Failure							
Characteristic Resistance	$N_{Rk,s,fi,30}$	[kN]	0,2	0,4	0,9	1,7	3,1
Pull-out failure							
Characteristic Resistance in concrete C20/25 to C50/60	$N_{Rk,p,fi,30}$	[kN]	1,3	1,5	4,0	6,3	8,8
Concrete cone failure							
Characteristic Resistance in concrete C20/25 to C50/60	$N_{Rk,c,fi,30}$	[kN]	4,0	5,0	7,4	13,8	20,3
Duration of fire resistance = 60min, anchor type HVE			**M6**	**M8**	**M10**	**M12**	**M16**
Steel Failure							
Characteristic Resistance	$N_{Rk,s,fi,60}$	[kN]	0,2	0,3	0,8	1,3	2,4
Pull-out failure							
Characteristic Resistance in concrete C20/25 to C50/60	$N_{Rk,p,fi,60}$	[kN]	1,3	1,5	4,0	6,3	8,8
Concrete cone failure							
Characteristic Resistance in concrete C20/25 to C50/60	$N_{Rk,c,fi,60}$	[kN]	4,0	5,0	7,4	13,8	20,3
Duration of fire resistance = 90min, anchor type HVE			**M6**	**M8**	**M10**	**M12**	**M16**
Steel Failure							
Characteristic Resistance	$N_{Rk,s,fi,90}$	[kN]	0,1	0,3	0,6	1,1	2,0
Pull-out failure							
Characteristic Resistance in concrete C20/25 to C50/60	$N_{Rk,p,fi,90}$	[kN]	1,3	1,5	4,0	6,3	8,8
Concrete cone failure							
Characteristic Resistance in concrete C20/25 to C50/60	$N_{Rk,c,fi,90}$	[kN]	4,0	5,0	7,4	13,8	20,8
Duration of fire resistance = 120min, anchor type HVE			**M6**	**M8**	**M10**	**M12**	**M16**
Steel Failure							
Characteristic Resistance	$N_{Rk,s,fi,120}$	[kN]	0,1	0,2	0,5	0,8	1,6
Pull-out failure							
Characteristic Resistance in concrete C20/25 to C50/60	$N_{Rk,p,fi,120}$	[kN]	1,0	1,2	3,2	5,0	7,0
Concrete cone failure							
Characteristic Resistance in concrete C20/25 to C50/60	$N_{Rk,c,fi,120}$	[kN]	3,2	4,0	5,9	11,1	16,3
Spacing	$s_{cr,N}$	[mm]	**4 x h_{ef}**				
	s_{min}		55	110	80	135	130
Edge distance	$c_{cr,N}$		**2 x h_{ef}**				
	c_{min}		c_{min} = 2xh_{ef}; If fire attack comes from more than one side, the edge distance of the anchor has to be ≥ 300mm or ≥ 2 x h_{ef}				

electronic copy of the eta by dibt: eta-10/0060

Tecfi HVE Rock

Performances
Characteristic values for fire exposure under tension loads

Annex C 3

Table C4: Performances under fire exposure in concrete C20/25 to C50/60 (shear)

Duration of fire resistance = 30min, anchor type HVE			**M6**	**M8**	**M10**	**M12**	**M16**
Shear load without lever arm							
Characteristic resistance	$V_{Rk,s,fi,30}$	[kN]	0,3	0,5	1,2	2,1	3,9
Shear load with lever arm							
Characteristic bending resistance	$M^0_{Rk,s,fi,30}$	[Nm]	0,2	0,4	1,1	2,6	6,7
Duration of fire resistance = 60min, anchor type HVE			**M6**	**M8**	**M10**	**M12**	**M16**
Shear load without lever arm							
Characteristic resistance	$V_{Rk,s,fi,60}$	[kN]	0,3	0,4	1,0	1,6	2,9
Shear load with lever arm							
Characteristic bending resistance	$M^0_{Rk,s,fi,60}$	[Nm]	0,1	0,3	1,0	2,0	5,0
Duration of fire resistance = 90min, anchor type HVE			**M6**	**M8**	**M10**	**M12**	**M16**
Shear load without lever arm							
Characteristic resi stance	$V_{Rk,s,fi,90}$	[kN]	0,2	0,3	0,8	1,4	2,5
Shear load with lever arm							
Characteristic bending resistance	$M^0_{Rk,s,fi,90}$	[Nm]	0,1	0,3	0,8	1,7	4,3
Duration of fire resistance = 120min, anchor type HVE			**M6**	**M8**	**M10**	**M12**	**M16**
Shear load without lever arm							
Characteristic resistance	$V_{Rk,s,fi,120}$	[kN]	0,2	0,2	0,6	1,0	1,9
Shear load with lever arm							
Characteristic bending resistance	$M^0_{Rk,s,fi,120}$	[Nm]	0	0,2	0,6	1,3	3,3
Concrete pryout failure							
The characteristic resistance $V_{Rk,cp,fi,Ri}$ in concrete C20/25 to C50/60 is determined by:							
$\mathbf{V_{Rk,c,fi(90)} = k_8 \times N_{Rk,c,fi(90)}}$ (≤ R90) and $\mathbf{V_{Rk,c,fi(120)} = k_8 \times N_{Rk,c,fi(120)}}$ (up to R120)							
Concrete edge failure							
The characteristic resistance $V_{rk,cp,fi,Ri}$ in concrete C20/25 to C50/60 is determined by:							
$\mathbf{V^0_{Rk,c,fi(90)} = 0{,}25 \times V^0_{Rk,c}}$ (R30, R60, R90) and $\mathbf{V^0_{Rk,c,fi(120)} = 0{,}20 \times V^0_{Rk,c}}$ (R120) with							
$V^0_{Rk,c}$ as an initial value of the characteristic resistance of a single anchor in cracked concrete C20/25							

electronic copy of the eta by dibt: eta-10/0060

Tecfi HVE Rock

Performances
Characteristic values for fire exposure under shear loads

Annex C 4

Table C5: Displacements

Tension loads in cracked and uncracked concrete			**M6**	**M8**	**M10**	**M12**	**M16**
Service tension load in uncracked concrete C20/25	N	[kN]	7,6	7,6	9,5	16,7	21,4
Displacements	δ_{N0}	[mm]	1,3	1,5	1,0	1,3	1,8
	$\delta_{N\infty}$	[mm]	1,3	1,5	1,0	1,3	1,8
Service tension load in cracked concrete C20/25	N	[kN]	2,4	2,9	7,6	11,9	16,7
Displacements	δ_{N0}	[mm]	1,0	0,7	1,0	1,2	1,5
	$\delta_{N\infty}$	[mm]	1,6	1,3	1,6	1,7	1,5
Shear loads in cracked and uncracked concrete			**M6**	**M8**	**M10**	**M12**	**M16**
Service shear load in cracked and uncracked concrete C20/25	V	[kN]	7,7	12,3	21,0	23,3	52,5
Displacements	δ_{V0}	[mm]	2,4	2,6	2,5	3,0	4,0
	$\delta_{V\infty}$	[mm]	3,6	3,9	3,8	4,5	6,0
Seismic performance category C2							
Damage limit state							
Tension load	$\delta_{N,eq(DLS)}$	[mm]	5,56	5,24	4,23	5,39	6,74
Shear load	$\delta_{V,eq(DLS)}$	[mm]	3,18	5,74	5,12	5,98	6,93
Ultimate limit state							
Tension load	$\delta_{N,eq(ULS)}$	[mm]	22,70	17,65	14,50	16,03	20,59
Shear load	$\delta_{V,eq(ULS)}$	[mm]	4,82	11,02	9,37	9,42	12,96

electronic copy of the eta by dibt: eta-10/0060