Deutsches Institut für Bautechnik DIBt

Member of EOTA
www.eota.eu

Approval body for construction products and types of construction

Bautechnisches Prüfamt

An institution established by the Federal and Laender Governments

Designated according to Article 29 of Regulation (EU) No 305/2011 and member of EOTA (European Organisation for Technical Assessment)

European Technical Assessment

ETA-16/0770 of 17 February 2017

English translation prepared by DIBt - Original version in German language

General Part

Technical Assessment Body issuing the European Technical Assessment:	Deutsches Institut für Bautechnik
Trade name of the construction product	CELO screws BMax, BMax-D and BMax-F
Product family to which the construction product belongs	Screws for use in timber constructions
Manufacturer	CELO S.A. Poligono Industrial Pla de la Bruguera Rosselló, 7 08211 CASTELLAR DEL VALLÈS (BARCELONA) SPANIEN
Manufacturing plant	Plant 17
This European Technical Assessment contains	22 pages including 5 annexes which form an integral part of this assessment
This European Technical Assessment is issued in accordance with Regulation (EU) No 305/2011, on the basis of	European Assessment Document (EAD) 130118-00-0603

electronic copy of the eta by dibt: eta-16/0770

Deutsches Institut für Bautechnik
Kolonnenstraße 30 B | 10829 Berlin | GERMANY | Phone: +49 30 78730-0 | Fax: +49 30 78730-320 | Email: dibt@dibt.de | www.dibt.de

The European Technical Assessment is issued by the Technical Assessment Body in its official language. Translations of this European Technical Assessment in other languages shall fully correspond to the original issued document and shall be identified as such.

Communication of this European Technical Assessment, including transmission by electronic means, shall be in full. However, partial reproduction may only be made with the written consent of the issuing Technical Assessment Body. Any partial reproduction shall be identified as such.

This European Technical Assessment may be withdrawn by the issuing Technical Assessment Body, in particular pursuant to information by the Commission in accordance with Article 25(3) of Regulation (EU) No 305/2011.

electronic copy of the eta by dibt: eta-16/0770

Specific Part

1 Technical description of the product

CELO screws BMax, BMax-D and BMax-F are self-tapping screws made from special carbon steel. The screws are hardened. The screws have a corrosion protection according to Annex A.2.6 and an antifriction coating. The outer thread diameter is not less than 6.0 mm and not greater than 14.0 mm. The overall length of the screws is ranging from 40 mm to 1500 mm. Further dimensions are shown in Annex 5.

The washers are made from carbon steel. The dimensions of the washers are given in Annex 5.

2 Specification of the intended use in accordance with the applicable European Assessment Document

The performances given in Section 3 are only valid if the screws are used in compliance with the specifications and conditions given in Annex 1 and 2.

Durability is only ensured if the specifications of intended use according to Annex 1 and 2 are taken into account.

The verifications and assessment methods on which this European Technical Assessment is based lead to the assumption of a working life of the screws of at least 50 years. The indications given on the working life cannot be interpreted as a guarantee given by the producer, but are to be regarded only as a means for choosing the right products in relation to the expected economically reasonable working life of the works.

3 Performance of the product and references to the methods used for its assessment

3.1 Mechanical resistance and stability (BWR 1)

Essential characteristic	Performance
Dimensions	See Annex 5
Characteristic yield moment	See Annex 2
Characteristic withdrawal parameter	See Annex 2
Characteristic head pull-through parameter	See Annex 2
Characteristic tensile strength	See Annex 2
Characteristic yield strength	See Annex 2
Characteristic torsional strength	See Annex 2
Insertion moment	See Annex 2
Spacing, end and edge distances of the screws and minimum thickness of the wood based material	See Annex 2
Slip modulus for mainly axially loaded screws	See Annex 2

electronic copy of the eta by dibt: eta-16/0770

3.2 Safety in case of fire (BWR 2)

Essential characteristic	Performance
Reaction to fire	The screws are made of steel classified as Euroclass A1 in accordance with EC decision 96/603/EC, as amended by EC decision 2000/605/EC.

3.3 Hygiene, health and the environment (BWR 3)

Not applicable

3.4 Safety and accessibility in use (BWR 4)

Same as BWR 1

3.5 Protection against noise (BWR 5)

Not applicable

3.6 Energy economy and heat retention (BWR 6)

Not applicable

3.7 Sustainable use of natural resources (BWR 7)

For the sustainable use of natural resources no performance was investigated for this product.

4 Assessment and verification of constancy of performance (AVCP) system applied, with reference to its legal base

In accordance with EAD No. 130118-00-0603 the applicable European legal act is: 97/176/EC.

The system to be applied is: 3

5 Technical details necessary for the implementation of the AVCP system, as provided for in the applicable EAD

Technical details necessary for the implementation of the AVCP system are laid down in the control plan deposited with Deutsches Institut für Bautechnik.

Issued in Berlin on 17 February 2017 by Deutsches Institut für Bautechnik

Uwe Bender
Head of Department

beglaubigt:
Dewitt

electronic copy of the eta by dibt: eta-16/0770

Annex 1 Specifications of intended use

A.1.1 Use of the CELO BMax screws only for:

– Static and quasi-static loads

A.1.2 Base materials

The self-tapping screws are used for connections in load bearing timber structures between wood-based members or between those members and steel members:

– Solid timber (softwood) according to EN 14081-1[1],
– Glued laminated timber (softwood) according to EN 14080[2],
– Laminated veneer lumber LVL of softwood according to EN 14374[3], arrangement of the screws only perpendicular to the plane of the veneers,
– Glued solid timber (softwood) according to EN 14080 or national provisions that apply at the installation site,
– Cross-laminated timber (softwood) according to European Technical Approvals/Assessments or national provisions that apply at the installation site.

The screws may be used for connecting the following wood-based panels to the timber members mentioned above:

– Plywood according to EN 636[4] and EN 13986[5],
– Oriented Strand Board, OSB according to EN 300[6] and EN 13986,
– Particleboard according to EN 312[7] and EN 13986,
– Fibreboards according to EN 622-2[8], EN 622-3[9] and EN 13986,
– Cement-bonded particle boards according to EN 634-2[10] and EN 13986,
– Solid-wood panels according to EN 13353[11] and EN 13986.

Wood-based panels shall only be arranged on the side of the screw head.

CELO screws BMax, BMax-D and B-Max-F may be used for the fixing of thermal insulation material on top of rafters or on wood-based members in vertical façades.

CELO BMax-F screws may be used for reinforcing of timber structures perpendicular to the grain.

electronic copy of the eta by dibt: eta-16/0770

1	EN 14081-1:2005+A1:2011	Timber structures – Strength graded structural timber with rectangular cross section – Part 1: General requirements
2	EN 14080:2013	Timber structures - Glued laminated timber and glued solid timber - Requirements
3	EN 14374:2004	Timber structures - Structural laminated veneer lumber - Requirements
4	EN 636:2012+A1:2015	Plywood - Specifications
5	EN 13986:2004+A1:2015	Wood-based panels for use in construction - Characteristics, evaluation of conformity and marking
6	EN 300:2006	Oriented strand boards (OSB) – Definition, classification and specifications
7	EN 312:2010	Particleboards - Specifications
8	EN 622-2:2004	Fibreboards – Specifications – Part 2: Requirements for hardboards
9	EN 622-3:2004	Fibreboards - Specifications - Part 3: Requirements for medium boards
10	EN 634-2:2007	Cement-bonded particleboards – Specifications – Part 2: Requirements for OPC bonded particleboards for use in dry, humid and external conditions
11	EN 13353:2008+A1:2011	Solid wood panels (SWP) – Requirements

A.1.3 Use Conditions (environmental conditions)

The corrosion protection of the CELO BMax screws is specified in Annex A.2.6. With regards to the use and the environmental conditions, the national provisions of the place of installation apply.

A.1.4 Installation provisions

EN 1995-1-1[12] in conjunction with the respective national annex applies for the installation.

A minimum of two screws shall be used for connections in load bearing timber structures. This does not apply for special situations specified in National Annexes to EN 1995-1-1.

The screws are driven into the wood-based member made of softwood without pre-drilling. The screw holes in steel members shall be pre-drilled with an adequate diameter greater than the outer thread diameter.

CELO BMax-F screws with an outer thread diameter of 13 mm and 14 mm and a length greater or equal than 800 mm shall be only driven in a guiding hole with a diameter of 7 mm and a minimum length of 80 mm.

If screws with an outer thread diameter $d \geq 8$ mm are driven into the wood-based member without pre-drilling, the structural solid or glued laminated timber, laminated veneer lumber and similar glued members shall be from spruce, pine or fir.

In the case of fastening battens on thermal insulation material on top of rafters the screws shall be driven in the rafter through the battens and the thermal insulation material without pre-drilling in one sequence.

Countersunk head screws may be used with washers according to Annex 5. After inserting the screw the washers shall touch the surface of the wood-based member completely.

By fastening screws in wood-based members the head of the screws shall be flush with the surface of the wood-based member. For cylinder head screws the head part remains unconsidered.

electronic copy of the eta by dibt: eta-16/0770

[12] EN 1995-1-1:2004+AC:2006+A1:2008+A2:2014 Eurocode 5: Design of timber structures – Part 1-1: General - Common rules and rules for buildings

ANNEX 2 – Characteristic values of the load-carrying capacities

Table A.2.1 Characteristic load-carrying capacities of CELO BMax screws

Outer thread diameter [mm]	**6.0**	**8.0**	**10.0**	**12.0**	**13.0**	**14.0**
Characteristic yield moment $M_{y,k}$ [Nm]	10.0	20.0	30.0	42.0	60.0	68.0
Characteristic tensile strength $f_{tens,k}$ [kN]	12.0	21.0	27.0	36.0	55.0	55.0
Characteristic torsional strength $f_{tor,k}$ [Nm]	10.0	24.0	39.0	58.0	95.0	102.0

A.2.1 General

The penetration length of the threaded part of the screw in the wood-based members l_{ef} shall be

$$l_{ef} \geq \frac{4 \cdot d}{\sin \alpha} \qquad (2.1)$$

where

α angle between screw axis and grain direction

d outer thread diameter of the screw.

The outer thread diameter of screws inserted in cross-laminated timber shall be at least 6 mm. The inner thread diameter d_1 of the screws shall be greater than the maximal width of the gaps in the layer of cross laminated timber.

A.2.2 Laterally loaded screws

The outer thread diameter d shall be used as effective diameter of the screw according to EN 1995-1-1.
The embedding strength for the screws in wood-based members or in wood-based panels shall be taken from EN 1995-1-1 or from national provisions that apply at the installation site unless otherwise specified in the following.

A.2.3 Axially loaded screws

The axial slip modulus K_{ser} of the threaded part of a screw for the serviceability limit state shall be taken independent of angle α to the grain as:

$$K_{ser} = 780 \cdot d^{0,2} \cdot l_{ef}^{0,4} \quad \text{[N/mm]} \qquad (2.2)$$

Where

d outer thread diameter of the screw [mm]

l_{ef} penetration length of the threaded part of the screw in the wood-based member [mm].

A.2.3.1 Axial withdrawal capacity

The characteristic withdrawal parameter at an angle α = 90° to the grain based on a characteristic density of the wood-based member of 350 kg/m³ is

$f_{ax,k}$ = 11 N/mm² for screws with 6 mm ≤ d ≤ 8 mm and

$f_{ax,k}$ = 10 N/mm² for screws with d ≥ 10 mm.

electronic copy of the eta by dibt: eta-16/0770

For LVL a maximum characteristic density of 500 kg/m³ shall be used in equation (8.40a) of EN 1995-1-1.

A.2.3.2 Head pull-through capacity

The characteristic value of the head pull-through parameter for CELO BMax screws for a characteristic density of 350 kg/m³ of the timber and for wood-based panels like

- Plywood according to EN 636 and EN 13986
- Oriented Strand Board, OSB according to EN 300 and EN 13986
- Particleboard according to EN 312 and EN 13986
- Fibreboards according to EN 622-2, EN 622-3 and EN 13986
- Cement-bonded particle boards according to EN 634-2 and EN 13986
- Solid-wood panels according to EN 13353 and EN 13986

with a thickness of more than 20 mm is

$f_{head,k}$ = 9.4 N/mm² for screws with countersunk or wafer head.

For wood-based panels a maximum characteristic density of 380 kg/m³ and for LVL a maximum characteristic density of 500 kg/m³ shall be used in equation (8.40b) of EN 1995-1-1.

The head diameter shall be equal to or greater than 1.8 · d_s, where d_s is the smooth shank or the inner thread diameter. Otherwise the characteristic head pull-through capacity in equation (8.40b) of EN 1995-1-1 is for all wood-based materials: $F_{ax,\alpha,RK}$ = 0.

For wood based panels with a thickness 12 mm ≤ t ≤ 20 mm the characteristic value of the head pull-through parameter for the screws is:

$f_{head,k}$ = 8 N/mm²

For wood based panels with a thickness of less than 12 mm the characteristic head pull-through capacity for screws shall be based on a characteristic value of the head pull-through parameter of 8 N/mm², and limited to 400 N complying with the minimum thickness of the wood based panels of 1.2·d, with d as outer thread diameter and the values in Table A.2.2.

Table A.2.2 Minimum thickness of wood based panels

Wood based panel	**Minimum thickness [mm]**
Plywood	6
Fibreboards (hardboards and medium boards)	6
Oriented Strand Boards, OSB	8
Particleboards	8
Cement-bonded particle board	8
Solid wood Panels	12

For CELO screws BMax-F and BMax-D with countersunk or wafer head the withdrawal capacity of the thread in the wood-based member with the screw head may be taken into account instead of the head pull-through capacity:

$$F_{ax,\alpha,Rk} = \max \begin{cases} f_{head,k} \cdot d_h^2 \cdot \left(\frac{\rho_k}{350}\right)^{0,8} \\ \frac{f_{ax,k} \cdot d \cdot l_{ef,k}}{1.2 \cdot \cos^2\alpha + \sin^2\alpha} \cdot \left(\frac{\rho_k}{350}\right)^{0,8} \end{cases} \qquad (2.3)$$

electronic copy of the eta by dibt: eta-16/0770

For CELO screws BMax-F and BMax-D with cylinder head the withdrawal capacity of the thread in the wood-based member with the screw head may be taken into account:

$$F_{ax,\alpha,Rk} = \frac{f_{ax,k} \cdot d \cdot l_{ef,k}}{1.2 \cdot \cos^2\alpha + \sin^2\alpha} \cdot \left(\frac{\rho_k}{350}\right)^{0,8} \qquad (2.4)$$

where

$f_{head,k}$ characteristic value of the head pull-through capacity of the screw [N/mm²]

$f_{ax,k}$ characteristic value of the axial withdrawal capacity of the threaded part of the screw, $f_{ax,k}$ does not apply for wood-based panels [N/mm²]

d_h diameter of the screw head [mm],

ρ_k characteristic density of the wood-based member with the screw head [kg/m³]

$l_{ef,k}$ penetration length of the threaded part of the screw in the wood-based member with the screw head [mm] $l_{ef,k} \geq 4 \cdot d$

α angle α between screw axis and grain direction, $30° \leq \alpha \leq 90°$

Outer diameter of washer $d_k > 32$ mm shall not be considered.

In steel-to-timber connections the head pull-through capacity is not governing.

electronic copy of the eta by dibt: eta-16/0770

A.2.3.3 Compressive capacity of CELO screws BMax-F

The design axial capacity $F_{ax,Rd}$ of CELO screws BMax-F embedded in solid timber, glued solid timber or glued laminated timber made from softwood with an angle between screw axis and grain direction of 30° ≤ α ≤ 90° is the minimum of the axial resistance against pushing-in and the buckling resistance of the screw.

$$F_{ax,Rd} = \min \left\{ f_{ax,d} \cdot d \cdot \ell_{ef} ; \kappa_c \cdot N_{pl,d} \right\} \quad (2.5)$$

$f_{ax,d}$ design value of the axial withdrawal capacity of the threaded part of the screw [N/mm²]

d outer thread diameter of the screw [mm]

l_{ef} penetration length of the threaded part of the screw in the timber member [mm]

$$\kappa_c = 1 \qquad \text{für } \bar{\lambda}_k \le 0{,}2 \quad (2.6)$$

$$\kappa_c = \frac{1}{k + \sqrt{k^2 - \bar{\lambda}_k^2}} \qquad \text{für } \bar{\lambda}_k > 0{,}2 \quad (2.7)$$

$$k = 0{,}5 \cdot \left[1 + 0{,}49 \cdot \left(\bar{\lambda}_k - 0{,}2 \right) + \bar{\lambda}_k^2 \right] \quad (2.8)$$

and a relative slenderness ratio $\bar{\lambda}_k = \sqrt{\frac{N_{pl,k}}{N_{ki,k}}}$ (2.9)

where:

$N_{pl,k}$ characteristic plastic normal force related to the net cross-section of the inner thread diameter: $N_{pl,k} = \pi \cdot \frac{d_1^2}{4} \cdot f_{y,k}$ (2.10)

$f_{y,k}$ characteristic yield strength,
$f_{y,k}$ = 900 N/mm² for CELO screws BMax-F with d ≥ 12 mm and
$f_{y,k}$ = 1000 N/mm² for CELO screws BMax-F with 6 mm ≤ d ≤ 10 mm

d_1 inner thread diameter of the screw [mm]

$$N_{pl,d} = \frac{N_{pl,k}}{\gamma_{M1}} \quad (2.11)$$

γ_{M1} partial factor according to EN 1993-1-1 in conjunction with the particular national annex

Characteristic ideal elastic buckling load:

$$N_{ki,k} = \sqrt{c_h \cdot E_S \cdot I_S} \quad [N] \quad (2.12)$$

Elastic foundation of the screw:

$$c_h = \left(0{,}19 + 0{,}012 \cdot d\right) \cdot \rho_k \cdot \left(\frac{90° + \alpha}{180°} \right) \quad [N/mm^2] \quad (2.13)$$

ρ_k characteristic density of the wood-based member [kg/m³],
α angle between screw axis and grain direction, 30° ≤ α ≤ 90°

Modulus of elasticity:

E_s = 210000 N/mm²

Second moment of area:

$$I_s = \frac{\pi \cdot d_1^4}{64} \quad [mm^4] \quad (2.14)$$

electronic copy of the eta by dibt: eta-16/0770

A.2.4 Spacing, end and edge distances of the screws and minimum thickness of the wood based material

Minimum thickness for structural members made from solid timber, glued laminated timber, glued solid timber, laminated veneer lumber and cross laminated timber is t = 30 mm for screws with d ≤ 8 mm, t = 40 mm for screws with d = 10 mm and t = 100 mm for screws with d ≥ 12 mm.

A.2.4.1 Laterally and/or axially loaded screws

Screws in non pre-drilled holes

For CELO BMax screws minimum spacing and distances are given in EN 1995-1-1:2004+AC:2006+A1:2008+A2:2014, clause 8.3.1.2 and Table 8.2 as for nails in non-predrilled holes. Here, the outer thread diameter d shall be considered.

For Douglas fir members minimum spacing and distances parallel to the grain shall be increased by 50%.

Minimum distances from loaded or unloaded ends shall be at least 15·d for screws with outer thread diameter d ≥ 8 mm and timber thickness t < 5·d.

Minimum distances from the unloaded edge perpendicular to the grain may be reduced to 3·d also for timber thickness t < 5·d, if the spacing parallel to the grain and the end distance is at least 25·d.

A.2.4.2 Only axially loaded screws

For CELO BMax screws the minimum spacings, end and edge distances are given in EN 1995-1-1:2004+AC:2006+A1:2008+A2:2014, clause 8.3.1.2 and Table 8.2 as for nails in non-predrilled holes and clause 8.7.2, Table 8.6.

A.2.5 Insertion moment

The ratio between the characteristic torsional strength $f_{tor,k}$ and the mean value of insertion moment $R_{tor,mean}$ fulfills the requirement for all screws.

A.2.6 Durability against corrosion

Screws and washers made from carbon steel may have the coatings according to Table A.2.3

Table A.2.3 Coatings of the CELO BMax screws

Coating	Mean thickness of the coating [µm]
electrogalvanised	8

electronic copy of the eta by dibt: eta-16/0770

ANNEX 3 - Compression reinforcement perpendicular to the grain

A.3.1 General

Only CELO screws BMax-F shall be used for compression reinforcement perpendicular to the grain. The provisions are valid for timber members made from solid timber, glued solid timber or glued laminated timber made from softwood.

The compression force shall evenly be distributed to the screws used as compression reinforcement.

The screws are driven into the timber member perpendicular to the contact surface under an angle between the screw axis and the grain direction of 45° to 90°. The screw heads shall be flush with the timber surface.

A.3.2 Design

For the design of reinforced contact areas the following conditions shall be met independently of the angle between the screw axis and the grain direction.

The design resistance of a reinforced contact area is:

$$R_{90,d} = \min \begin{Bmatrix} k_{c,90} \cdot B \cdot \ell_{ef,1} \cdot f_{c,90,d} + n \cdot \min\{R_{ax,d}; \kappa_c \cdot N_{pl,d}\} \\ B \cdot \ell_{ef,2} \cdot f_{c,90,d} \end{Bmatrix} \quad (3.1)$$

where:

$k_{c,90}$ parameter according to EN 1995-1-1:2004+AC:2006+A1:2008+A2:2014, 6.1.5

B bearing width [mm]

$\ell_{ef,1}$ effective contact length according to EN 1995-1-1:2004+AC:2006+A1:2008+A2:2014, 6.1.5 [mm]

$f_{c,90,d}$ design compressive strength perpendicular to the grain [N/mm²]

n number of reinforcing screws, $n = n_0 \cdot n_{90}$

n_0 number of reinforcing screws arranged in a row parallel to the grain

n_{90} number of reinforcing screws arranged in a row perpendicular to the grain

$$R_{ax,d} = f_{ax,d} \cdot d \cdot \ell_{ef} \text{ [N]} \quad (3.2)$$

$f_{ax,d}$ design value of the axial withdrawal capacity of the threaded part of the screw [N/mm²]

d outer thread diameter of the screw [mm]

κ_c according to Annex A.2.3.3

$N_{pl,d}$ according to Annex A.2.3.3 [N]

$\ell_{ef,2}$ effective contact length in the plane of the screw tips (see Figure 3.1) [mm]

$\ell_{ef,2} = \{\ell_{ef} + (n_0 - 1) \cdot a_1 + \min(\ell_{ef}\,;\, a_{1,c})\}$ for end supports (see Figure 3.1 left)

$\ell_{ef,2} = \{2 \cdot \ell_{ef} + (n_0 - 1) \cdot a_1\}$ for intermediate supports (see Figure 3.1 right)

ℓ_{ef} threaded length of the screw in the timber member [mm]

a_1 Spacing a_1 in a plane parallel to grain, see chapter A.2.4.2 [mm]

$a_{1,CG}$ End distance of the centre of gravity of the threaded part in the timber member, see chapter A.2.4.2 [mm]

electronic copy of the eta by dibt: eta-16/0770

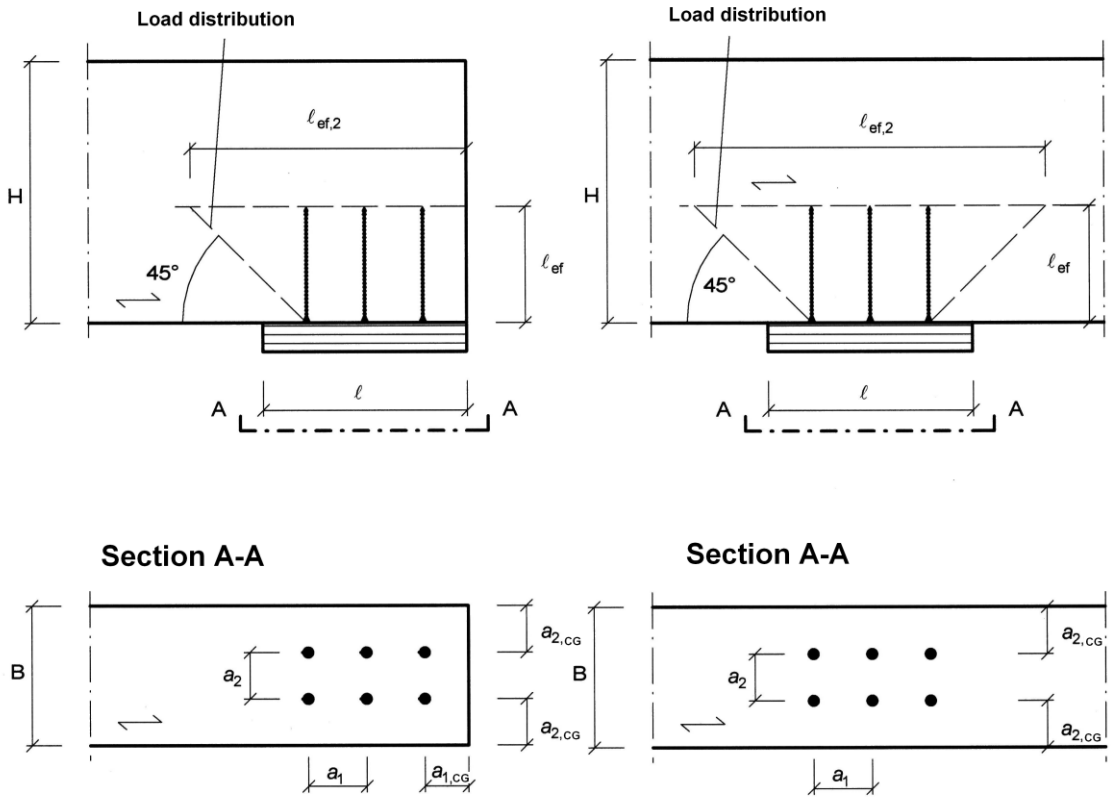

Figure A.3.1: Reinforced end support (left) and reinforced intermediate support (right)

electronic copy of the eta by dibt: eta-16/0770

ANNEX 4 - Fastening of thermal insulation material on top of rafters

A.4.1 General

CELO BMaxscrews may be used for the fixing of thermal insulation material on top of rafters or on wood-based members in vertical façades. In the following, the meaning of the word rafter includes wood-based members with inclinations between 0° and 90°.
The thickness of the thermal insulation material may be up to 300 mm. The thermal insulation material shall be applicable as insulation on top of rafters or for façades according to national provisions that apply at the installation site.
The battens have to be from solid timber according to EN 338/EN 14081-1. The minimum thickness t and the minimum width b of the battens are given in table A.4.1:

Table A.4.1 Minimum thickness and minimum width of the battens

Outer thread diameter [mm]	Minimum thickness t [mm]	Minimum width b [mm]
6 and 8	30	50
10	40	60
12, 13 and 14	80	100

Instead of battens the wood-based panels specified in chapter A.4.2.1 may be used. Only screws with countersunk head shall be used for fixing wood-based panels on rafters with thermal insulation material as interlayer.

The minimum width of the rafters shall be 60 mm.

The spacing between screws shall be not more than 1.75 m.

Friction forces shall not be considered for the design of the characteristic axial load of the screws.

The anchorage of wind suction forces as well as the bending stresses of the battens shall be considered for design. Screws perpendicular to the grain of the rafter (angle $\alpha = 90$ °) may be arranged where required considering the design of the battens.

A.4.2 Parallel inclined screws and thermal insulation material in compression

A.4.2.1 Mechanical model

The system of rafter, thermal insulation material on top of rafter and counter battens parallel to the rafter may be considered as a beam on elastic foundation. The counter batten represents the beam, and the thermal insulation material on top of the rafter the elastic foundation. The minimum compressive stress of the thermal insulation material at 10 % deformation, measured according to EN 826[13], shall be $\sigma_{(10\,\%)}$ = 0.05 N/mm². The counter batten is loaded perpendicular to the axis by point loads F_b transferred by regularly spaced battens. Further point loads F_s are caused by the shear load of the roof due to dead and snow load, which are transferred from the screw heads into the counter battens.

Instead of battens the following wood-based panels may be used to cover the thermal insulation material if they are suitable for that use:

- Plywood according to EN 636 and EN 13986,
- Oriented Strand Board, OSB according to EN 300 and EN 13986,
- Particleboard according to EN 312 and EN 13986,
- Fibreboards according to EN 622-2, EN 622-3 and EN 13986.

The minimum thickness of the wood-based panels shall be 22 mm.

The word batten includes the meaning of wood-based panels in the following.

[13] EN 826:2013 Thermal insulating products for building applications - Determination of compression behaviour

electronic copy of the eta by dibt: eta-16/0770

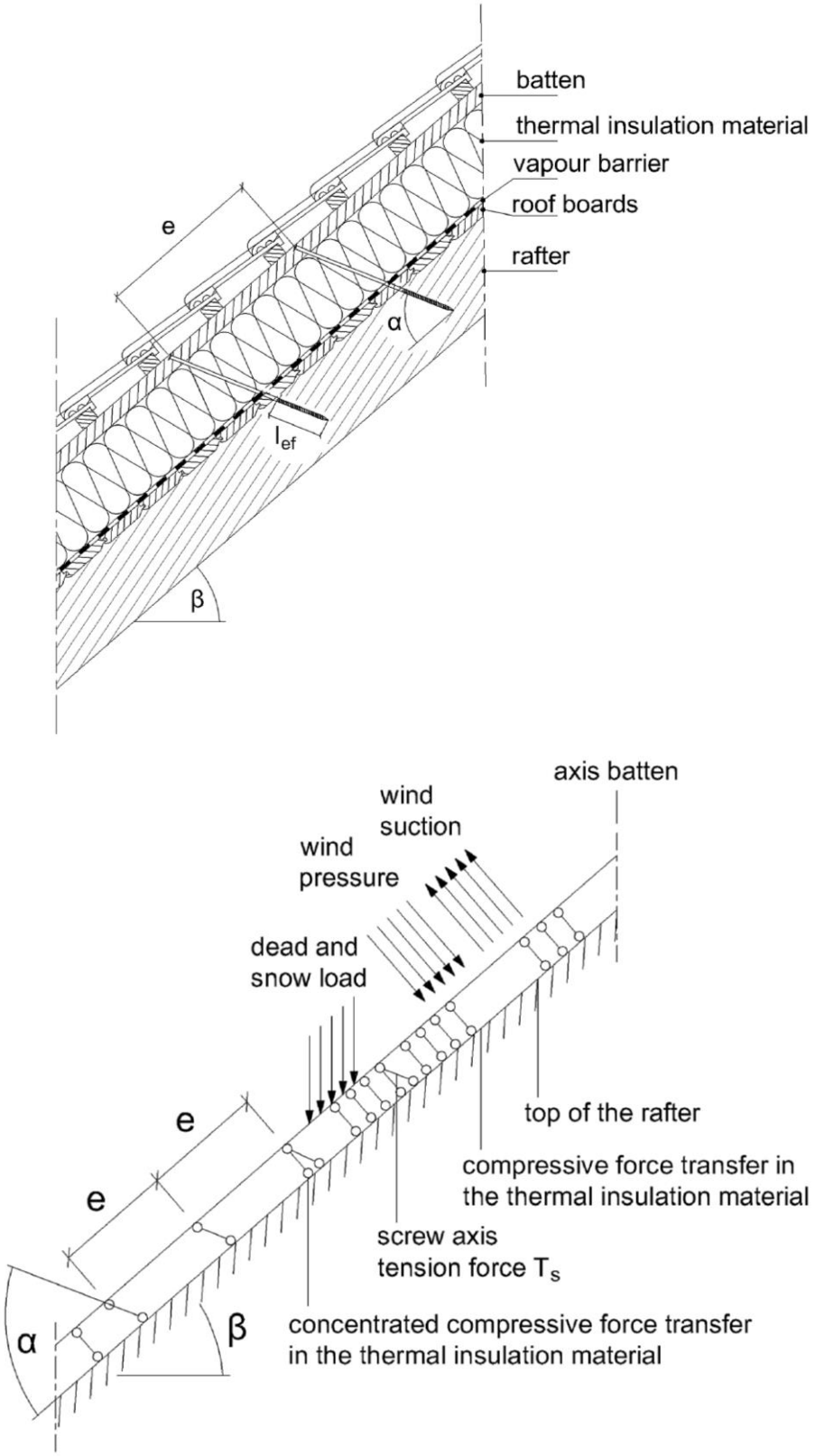

Figure A.4.1 Fastening of the thermal insulation material on top of rafters - structural system

CELO screws BMax, BMax-D and BMax-F	Annex 4
Fastening of thermal insulation material on top of rafters	

electronic copy of the eta by dibt: eta-16/0770

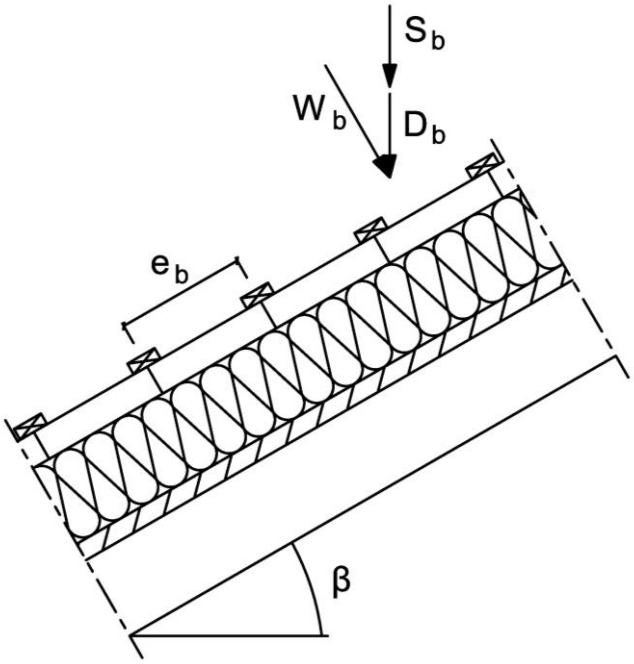

Figure A.4.2 Point loads F_b perpendicular to the battens

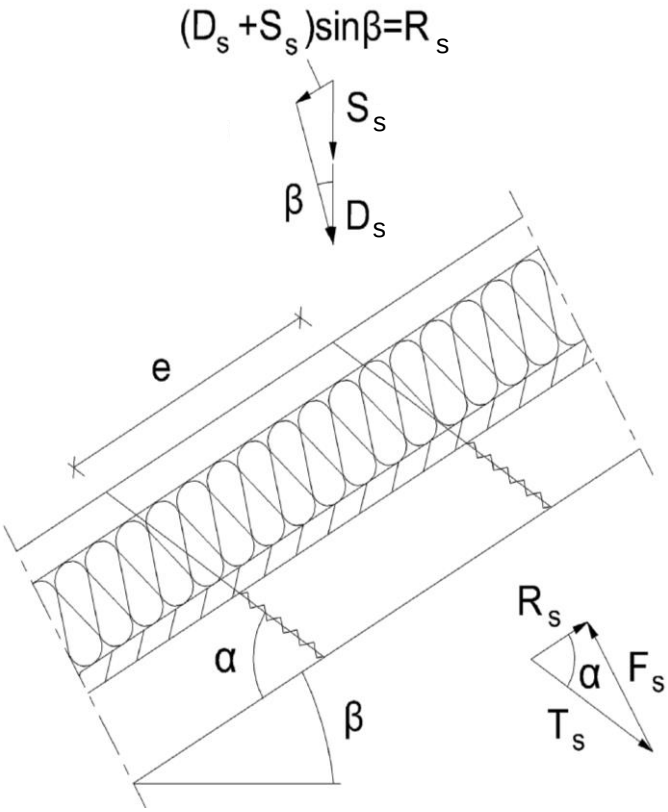

Figure A.4.3 Point loads F_s perpendicular to the battens, load application in the area of the screw heads

CELO screws BMax, BMax-D and BMax-F	Annex 4
Fastening of thermal insulation material on top of rafters	

electronic copy of the eta by dibt: eta-16/0770

A.4.2.2 Design of the battens

It's assumed that the spacing between the counter battens exceeds the characteristic length l_{char}.

The characteristic values of the bending stresses are calculated as:

$$M_k = \frac{(F_{b,k} + F_{s,k}) \cdot l_{char}}{4} \tag{4.1}$$

where (4.2)

l_{char} = characteristic length $l_{char} = \sqrt[4]{\frac{4 \cdot EI}{w_{ef} \cdot K}}$

EI = bending stiffness of the batten

K = coefficient of subgrade

w_{ef} = effective width of the thermal insulation material

$F_{b,k}$ = point loads perpendicular to the battens

$F_{s,k}$ = point loads perpendicular to the battens, load application in the area of the screw heads

The coefficient of subgrade K may be calculated from the modulus of elasticity E_{HI} and the thickness t_{HI} of the thermal insulation material if the effective width w_{ef} of the thermal insulation material under compression is known. Due to the load extension in the thermal insulation material the effective width w_{ef} is greater than the width of the batten or rafter, respectively. For further calculations, the effective width w_{ef} of the thermal insulation material may be determined according to:

$$w_{ef} = w + t_{HI}/2 \tag{4.3}$$

where

w = minimum from width of the batten or rafter, respectively

t_{HI} = thickness of the thermal insulation material

$$K = \frac{E_{HI}}{t_{HI}} \tag{4.4}$$

The following condition shall be satisfied:

$$\frac{\sigma_{m,d}}{f_{m,d}} = \frac{M_d}{W \cdot f_{m,d}} \leq 1 \tag{4.5}$$

For the calculation of the section modulus W the net cross section shall be considered.

The characteristic values of the shear stresses shall be calculated according to:

$$V_k = \frac{(F_b + F_s)}{2} \tag{4.6}$$

The following condition need to be satisfied:

$$\frac{\tau_d}{f_{v,d}} = \frac{1.5 \cdot V_d}{A \cdot f_{v,d}} \leq 1 \tag{4.7}$$

For the calculation of the cross section area the net cross section shall be considered.

electronic copy of the eta by dibt: eta-16/0770

A.4.2.3 Design of the thermal insulation material

The characteristic value of the compressive stresses in the thermal insulation material shall be calculated according to:

$$\sigma_k = \frac{1.5 \cdot F_{b,k} + F_{s,k}}{2 \cdot l_{char} \cdot w} \tag{4.8}$$

The design value of the compressive stress shall not be greater than 110 % of the compressive strength at 10 % deformation calculated according to EN 826.

A.4.2.4 Design of the screws

The screws are loaded predominantly axial. The characteristic value of the axial tension force in the screw may be calculated from the shear loads of the roof R_s:

$$T_{S,k} = \frac{R_{S,k}}{\cos\alpha} \tag{4.9}$$

The load-carrying capacity of axially loaded screws is the minimum design value of the axial withdrawal capacity of the threaded part of the screw, the head pull-through capacity of the screw and the tensile capacity of the screw according to Annex 2.

In order to limit the deformation of the screw head for thermal insulation material with thickness over 220 mm or with compressive strength below 0.12 N/mm², respectively, the axial withdrawal capacity of the screws shall be reduced by the factors k_1 and k_2:

$$F_{ax,\alpha,Rd} = \min\left\{ \frac{f_{ax,d} \cdot d \cdot l_{ef} \cdot k_1 \cdot k_2}{1.2 \cdot \cos^2\alpha + \sin^2\alpha} \cdot \left(\frac{\rho_k}{350}\right)^{0.8} ; f_{head,d} \cdot d_h^2 \cdot \left(\frac{\rho_k}{350}\right)^{0.8} ; \frac{f_{tens,k}}{\gamma_{M2}} \right\} \tag{4.10}$$

where:

$f_{ax,d}$	design value of the axial withdrawal parameter of the threaded part of the screw [N/mm²]
d	outer thread diameter of the screw [mm]
l_{ef}	penetration length of the threaded part of the screw in the rafter [mm], 40 mm ≤ l_{ef} ≤ 100 mm
ρ_k	characteristic density of the wood-based member [kg/m³], for LVL the assumed characteristic density shall not exceed 500 kg/m³
α	angle α between screw axis and grain direction, 30° ≤ α ≤ 90°
$f_{head,d}$	design value of the head pull-through parameter of the screw [N/mm²]
d_h	head diameter of the screw [mm]
$f_{tens,k}$	characteristic tensile capacity of the screw according to Annex 2 [N]
γ_{M2}	partial factor according to EN 1993-1-1 in conjunction with the particular national annex
k_1	min {1; 220/t_{HI}}
k_2	min {1; $\sigma_{10\%}$/0.12}
t_{HI}	thickness of the thermal insulation material [mm]
$\sigma_{10\%}$	compressive stress of the thermal insulation material under 10 % deformation [N/mm²]

If equation (4.10) is fulfilled, the deflection of the battens does not need to be considered when designing the load-carrying capacity of the screws.

electronic copy of the eta by dibt: eta-16/0770

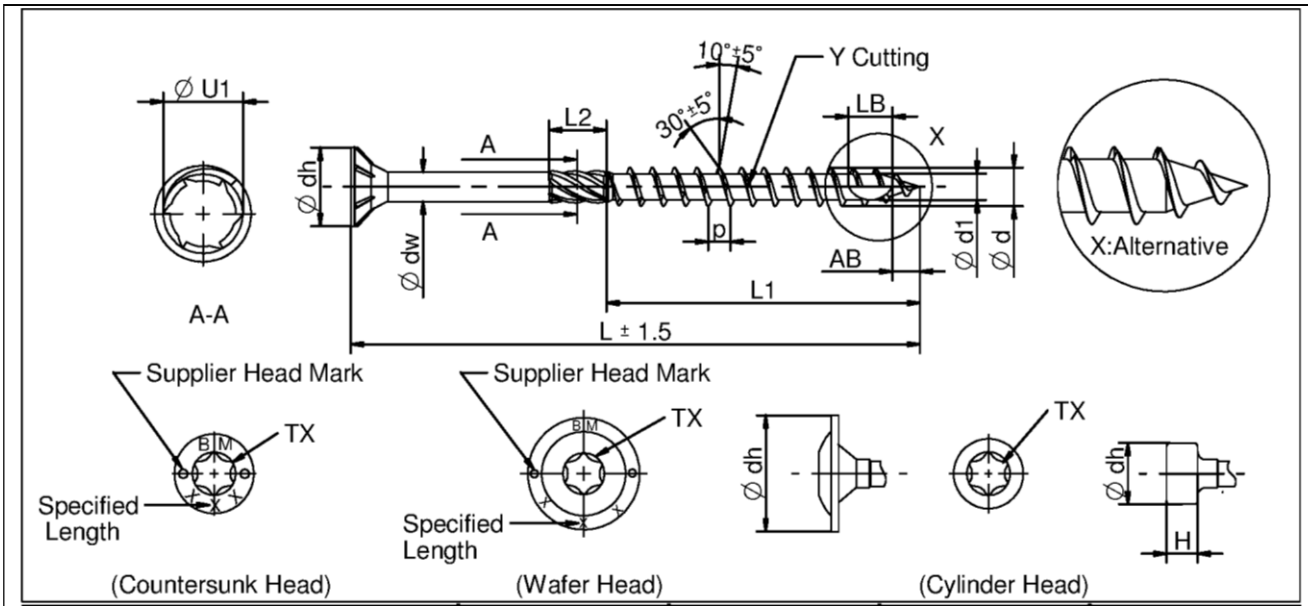

Nominal Diameter		Ø 6.0		Ø 8.0		Ø 10.0		Ø 12.0	
Ødh (Countersunk Head)	Upper Tol. / Lower Tol.	**12.0**	+0 / - 1.0	**15.0**	+0 / - 1.0	**18.5**	+0 / - 1.0	**21.5**	+0 / - 1.0
Ødh (Wafer Head)	Upper Tol. / Lower Tol.	**15.0**	+1.0 / - 1.0	**22.0**	+1.0 / - 1.0	**25.0**	+1.0 / - 1.0	**29.0**	+1.0 / - 1.0
Ødh (Cylinder Head)	Upper Tol. / Lower Tol.	**8.0**	+0 / - 1.0	**11.0**	+0 / - 1.0	**13.0**	+0 / - 1.0	**15.0**	+0 / - 1.0
H (Cylinder Head)	Upper Tol. / Lower Tol.	**5.0**	+0.5 / - 0.5	**6.0**	+0.5 / - 0.5	**7.0**	+0.5 / - 0.5	**8.0**	+0.5 / - 0.5
Ødw	Upper Tol. / Lower Tol.	**4.25**	+0.05 / - 0.05	**5.8**	+0.05 / - 0.05	**7.0**	+0.05 / - 0.05	**8.0**	+0.05 / - 0.05
Ød	Upper Tol. / Lower Tol.	**6.0**	+0.2 / - 0.2	**8.0**	+0.2 / - 0.2	**10.0**	+0.3 / - 0.3	**12.0**	+0.3 / - 0.3
Ød1	Upper Tol. / Lower Tol.	**4.0**	+0.2 / - 0.2	**5.2**	+0.25 / - 0.25	**6.2**	+0.3 / - 0.3	**7.0**	+0.3 / - 0.3
ØU1	Upper Tol. / Lower Tol.	**5.1**	+0.3 / - 0.3	**7.0**	+0.3 / - 0.3	**8.5**	+0.3 / - 0.3	**8.8**	+0.3 / - 0.3
LB	Upper Tol. / Lower Tol.	**17.0**	+3.0 / - 3.0	**18.0**	+3.0 / - 3.0	**19.0**	+3.0 / - 3.0	**20.0**	+3.0 / - 3.0
AB	Upper Tol. / Lower Tol.	**4.0**	+2.0 / - 2.0	**6.0**	+2.0 / - 2.0	**7.0**	+2.0 / - 2.0	**8.0**	+2.0 / - 2.0
p ±10%		L1<180 **3.3** / L1≥180 **4.5**		5.2		5.6		6.0	
TX		T30		T40		T50		T50	
L		L1	L2	L1	L2	L1	L2	L1	L2
40 mm		32±1.5		32±1.5					
50 mm		42±1.5		42±1.5					
60~70 mm		52±1.5		52±1.5					
80~120 mm	in 10 mm increments	52±1.5	12±1.5	52±1.5	12±1.5	52±1.5	12±1.5		
130~200 mm	in 10 mm increments	75±1.5	12±1.5	80±1.5	12±1.5	80±1.5	12±1.5	80±1.5	12±1.5
220~300 mm	in 20 mm increments	75±1.5	12±1.5	100±1.5	12±1.5	100±1.5	12±1.5	100±1.5	12±1.5
320~400 mm	in 20 mm increments			100±1.5	12±1.5	100±1.5	12±1.5	100±1.5	12±1.5
420~500 mm	in 20 mm increments			100±1.5	12±1.5	100±1.5	12±1.5	120±1.5	12±1.5
520~600 mm	in 20 mm increments			100±1.5	12±1.5	100±1.5	12±1.5	120±1.5	12±1.5

CELO screws BMax, BMax-D and BMax-F

CELO screws BMax, carbon steel
Partially threaded

Annex 5.1

electronic copy of the eta by dibt: eta-16/0770

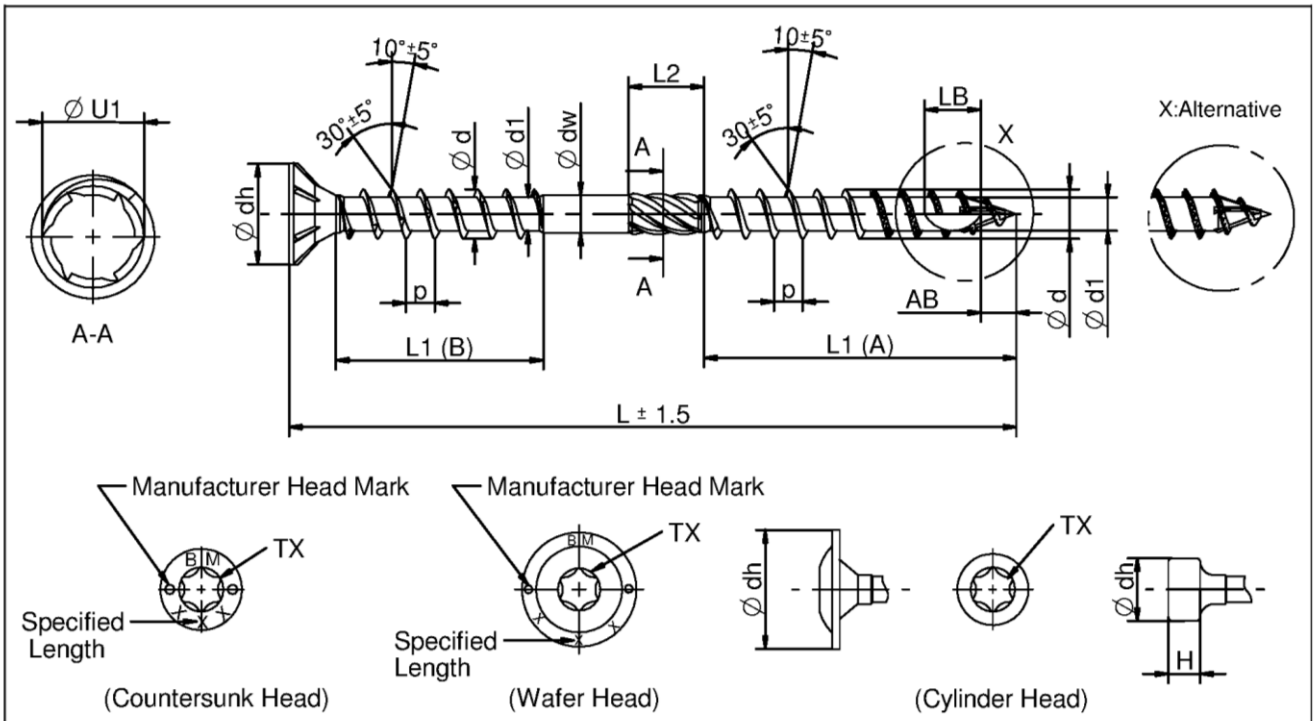

Nominal Diameter		Ø 6.0		Ø 8.0		Ø 10.0	
Ødh (Countersunk Head)	Upper Tol.	12.0	+0	15.0	+0	18.5	+0
	Lower Tol.		- 1.0		- 1.0		- 1.0
Ødh (Wafer Head)	Upper Tol.	15.0	+1.0	22.0	+1.0	25.0	+1.0
	Lower Tol.		- 1.0		- 1.0		- 1.0
Ødh (Cylinder Head)	Upper Tol.	8.0	+0	11.0	+0	13.0	+0
	Lower Tol.		- 1.0		- 1.0		- 1.0
H (Cylinder Head)	Upper Tol.	5.0	+0.5	6.0	+0.5	7.0	+0.5
	Lower Tol.		- 0.5		- 0.5		- 0.5
Ødw	Upper Tol.	4.25	+0.05	5.8	+0.05	7.0	+0.05
	Lower Tol.		- 0.05		- 0.05		- 0.05
Ød	Upper Tol.	6.0	+0.2	8.0	+0.2	10.0	+0.3
	Lower Tol.		- 0.2		- 0.2		- 0.3
Ød1	Upper Tol.	4.0	+0.2	5.2	+0.25	6.2	+0.3
	Lower Tol.		- 0.2		- 0.25		- 0.3
ØU1	Upper Tol.	5.1	+0.3	7.0	+0.3	8.5	+0.3
	Lower Tol.		- 0.3		- 0.3		- 0.3
LB	Upper Tol.	17.0	+3.0	18.0	+3.0	19.0	+3.0
	Lower Tol.		- 3.0		- 3.0		- 3.0
AB	Upper Tol.	4.0	+0.2	6.0	+0.2	7.0	+0.2
	Lower Tol.		- 0.2		- 0.2		- 0.2
p ± 10%		L1<180	3.3	5.2		5.6	
		L1≥180	4.5				
TX		T30		T40		T50	

L	L1 (A)	L1 (B)	L2	L1 (A)	L1 (B)	L2	L1 (A)	L1 (B)	L2
165~200 mm	75 ± 1.5	60 ± 1.5	12 ± 1.5	80 ± 1.5	60 ± 1.5	12 ± 1.5	80 ± 1.5	60 ± 1.5	12 ± 1.5
201~300 mm	75 ± 1.5	60 ± 1.5	12 ± 1.5	100 ± 1.5	60 ± 1.5	12 ± 1.5	100 ± 1.5	60 ± 1.5	12 ± 1.5
301~400 mm				100 ± 1.5	60 ± 1.5	12 ± 1.5	100 ± 1.5	60 ± 1.5	12 ± 1.5
401~500 mm				100 ± 1.5	60 ± 1.5	12 ± 1.5	100 ± 1.5	60 ± 1.5	12 ± 1.5
501~600 mm							100 ± 1.5	60 ± 1.5	12 ± 1.5

CELO screws BMax, BMax-D and BMax-F

CELO screws BMax-D, carbon steel
Double threaded

Annex 5.2

electronic copy of the eta by dibt: eta-16/0770

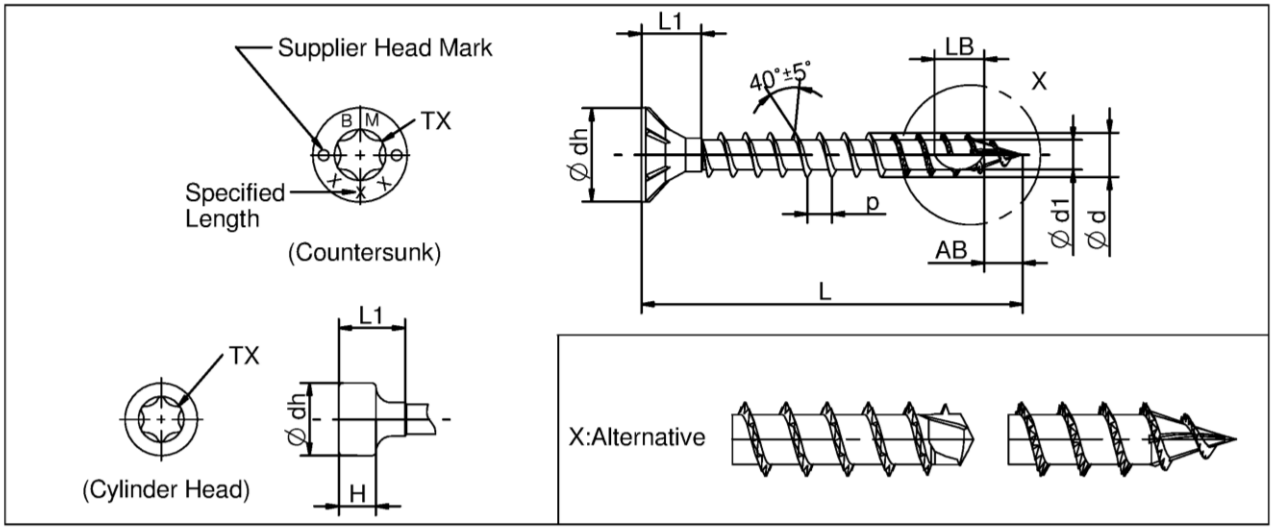

Nominal Diameter		Ø 6.0	Ø 8.0	Ø 10.0	Ø 12.0	Ø 13.0	Ø 14.0
Ødh (Countersunk Head)	Upper Tol. / Lower Tol.	**12.0** +0 / - 1.0	**15.0** +0 / - 1.0	**18.5** +0 / - 1.0	**21.5** +0 / - 1.0	**22.0** +0 / - 1.0	**22.5** +0 / - 1.0
Ødh (Cylinder Head)	Upper Tol. / Lower Tol.	**8.0** +0 / - 1.0	**11.0** +0 / - 1.0	**13.0** +0 / - 1.0	**15.0** +0 / - 1.0	**15.0** +0 / - 1.0	**15.0** +0 / - 1.0
H (Cylinder Head)	Upper Tol. / Lower Tol.	**5.0** +0.5 / - 0.5	**6.0** +0.5 / - 0.5	**7.0** +0.5 / - 0.5	**8.0** +0.5 / - 0.5	**9.0** +0.5 / - 0.5	**10.0** +0.5 / - 0.5
Ød	Upper Tol. / Lower Tol.	**6.0** +0.2 / - 0.2	**8.0** +0.2 / - 0.2	**10.0** +0.2 / - 0.2	**12.0** +0.2 / - 0.2	**13.0** +0.2 / - 0.2	**14.0** +0.2 / - 0.2
Ød1	Upper Tol. / Lower Tol.	**4.0** +0.2 / - 0.2	**5.2** +0.25 / - 0.25	**6.2** +0.3 / - 0.3	**7.0** +0.3 / - 0.3	**8.0** +0.3 / - 0.3	**8.5** +0.3 / - 0.3
LB	Upper Tol. / Lower Tol.	**17.0** +3.0 / - 3.0	**18.0** +3.0 / - 3.0	**19.0** +3.0 / - 3.0	**20.0** +3.0 / - 3.0	**21.0** +3.0 / - 3.0	**22.0** +3.0 / - 3.0
AB	Upper Tol. / Lower Tol.	**4.0** +2.0 / - 2.0	**6.0** +2.0 / - 2.0	**7.0** +2.0 / - 2.0	**8.0** +2.0 / - 2.0	**8.5** +2.0 / - 2.0	**9.0** +2.0 / - 2.0
p ±10%		3.8	4.8	5.6	6.0	6.0	6.8
TX		T30	T40	T50	T50	T50	T50
L		L1	L1	L1	L1	L1	L1
100~200 mm(±1.5)	in 10 mm increments	max.12mm	max.19mm	max.20mm	max.20.5mm		
210~300 mm(±1.5)	in 10 mm increments	max.12mm	max.19mm	max.20mm	max.20.5mm	max.21mm	max.22mm
310~400 mm(±1.5)	in 10 mm increments		max.19mm	max.20mm	max.20.5mm	max.21mm	max.22mm
410~500 mm(±1.5)	in 10 mm increments		max.19mm	max.20mm	max.20.5mm	max.21mm	max.22mm
510~600 mm(±1.5)	in 10 mm increments			max.20mm	max.20.5mm	max.21mm	max.22mm
610~800 mm(±1.5)	in 10 mm increments				max.20.5mm	max.21mm	max.22mm
810~1000 mm(±1.5)	in 10 mm increments				max.20.5mm	max.21mm	max.22mm
1010~1200 mm(±1.5)	in 10 mm increments					max.21mm	max.22mm
1210~1500 mm(±1.5)	in 10 mm increments						max.22mm

CELO screws BMax, BMax-D and BMax-F

CELO screws BMax-F, carbon steel
Fully threaded

Annex 5.3

electronic copy of the eta by dibt: eta-16/0770

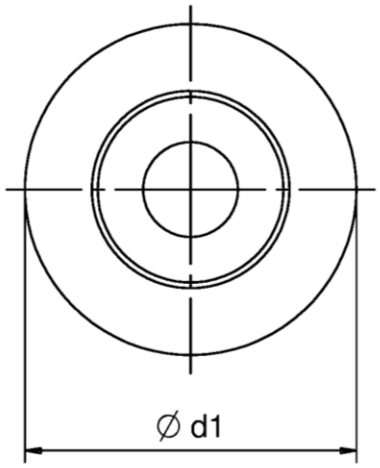

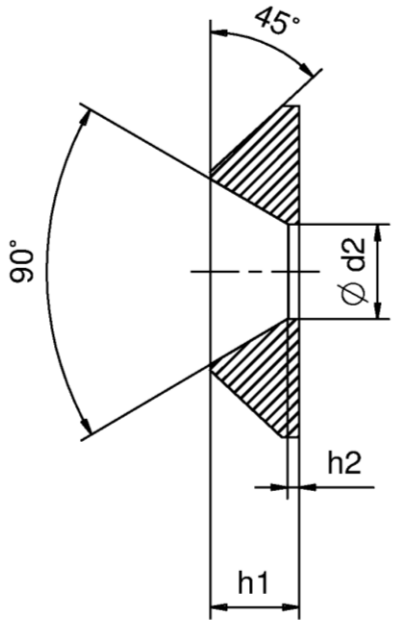

SIZE	M 6	M 8	M 10	M 12
∅ d1	19.50 ± 0.30	24.50 ± 0.30	30.00 ± 0.30	37.50 ± 0.30
∅ d2	7.50 ± 0.30	8.50 ± 0.30	10.80 ± 0.30	14.00 ± 0.30
h1	4.60 ± 0.30	5.40 ± 0.30	6.40 ± 0.30	8.50 ± 0.30
h2	1.50 ± 0.10	2.50 ± 0.10	2.70 ± 0.10	3.50 ± 0.10

CELO screws BMax, BMax-D and BMax-F

Washer

Annex 5.4

electronic copy of the eta by dibt: eta-16/0770