Deutsches Institut für Bautechnik DIBt

Member of EOTA
www.eota.eu

Approval body for construction products and types of construction

Bautechnisches Prüfamt

An institution established by the Federal and Laender Governments

Designated according to Article 29 of Regulation (EU) No 305/2011 and member of EOTA (European Organisation for Technical Assessment)

European Technical Assessment

ETA-11/0284 of 28 March 2019

English translation prepared by DIBt - Original version in German language

General Part

Technical Assessment Body issuing the European Technical Assessment:	Deutsches Institut für Bautechnik
Trade name of the construction product	HECO-FIX-plus, HECO-TOPIX, HECO-TOPIX-T and HECO-TOPIX-CC screws
Product family to which the construction product belongs	Screws for use in timber constructions
Manufacturer	HECO-Schrauben GmbH & Co. KG Dr.-Kurt-Steim-Straße 28 78713 Schramberg DEUTSCHLAND
Manufacturing plant	HECO-Schrauben GmbH & Co. KG Dr. Kurt-Steim-Straße 28 78713 Schramberg S.C. HECO Schrauben S.R.L Str. Laminoristilor Nr. 159 RO-405100 Campia Turzii
This European Technical Assessment contains	71 pages including 6 annexes which form an integral part of this assessment
This European Technical Assessment is issued in accordance with Regulation (EU) No 305/2011, on the basis of	EAD 130118-01-0603
This version replaces	ETA-11/0284 issued on 25 August 2016

electronic copy of the eta by dibt: eta-11/0284

Deutsches Institut für Bautechnik
Kolonnenstraße 30 B | 10829 Berlin | GERMANY | Phone: +49 30 78730-0 | Fax: +49 30 78730-320 | Email: dibt@dibt.de | www.dibt.de

The European Technical Assessment is issued by the Technical Assessment Body in its official language. Translations of this European Technical Assessment in other languages shall fully correspond to the original issued document and shall be identified as such.

Communication of this European Technical Assessment, including transmission by electronic means, shall be in full. However, partial reproduction may only be made with the written consent of the issuing Technical Assessment Body. Any partial reproduction shall be identified as such.

This European Technical Assessment may be withdrawn by the issuing Technical Assessment Body, in particular pursuant to information by the Commission in accordance with Article 25(3) of Regulation (EU) No 305/2011.

electronic copy of the eta by dibt: eta-11/0284

Specific Part

1 Technical description of the product

HECO-FIX-plus, HECO-TOPIX and HECO-TOPIX-T screws are screws made from special carbon or stainless steel. HECO-TOPIX-CC screws are screws made from special carbon steel. Screws made from carbon steel are hardened. They have a corrosion protection according to Annex A.2.6. The outer thread diameter is not less than 3.5 mm and not greater than 10.0 mm. The overall length of the screws is ranging from 20 mm to 500 mm (nominal dimension). Further dimensions are shown in Annex 6. The washers are made from carbon or stainless steel. The dimensions of the washers are given in Annex 6.

All HECO screws achieve a bending angle α of at least $45/d^{0.7} + 20$, where d is the outer thread diameter of the screws.

2 Specification of the intended use in accordance with the applicable European Assessment Document

The performances given in Section 3 are only valid if the HECO screws are used in compliance with the specifications and conditions given in Annexes 1 to 5.

The verifications and assessment methods on which this European Technical Assessment is based lead to the assumption of a working life of the HECO screws of at least 50 years. The indications given on the working life cannot be interpreted as a guarantee given by the producer, but are to be regarded only as a means for choosing the right products in relation to the expected economically reasonable working life of the works.

3 Performance of the product and references to the methods used for its assessment

3.1 Mechanical resistance and stability (BWR 1)

Essential characteristic	Performance
Dimensions	See Annex 6
Characteristic yield moment	See Annex 2
Bending angle	See Annex 2
Characteristic withdrawal parameter	See Annex 2
Characteristic head pull-through parameter	See Annex 2
Characteristic tensile strength	See Annex 2
Characteristic yield strength	See Annex 2
Characteristic torsional strength	See Annex 2
Insertion moment	See Annex 2
Spacing, end and edge distances of the screws and minimum thickness of the wood based material	See Annex 2
Slip modulus for mainly axially loaded screws	See Annex 2
Durability against corrosion	See Annex 2

electronic copy of the eta by dibt: eta-11/0284

3.2 Safety in case of fire (BWR 2)

Essential characteristic	Performance
Reaction to fire	Class A1

3.3 Safety and accessibility in use (BWR 4)

Same as BWR 1

4 Assessment and verification of constancy of performance (AVCP) system applied, with reference to its legal base

In accordance with EAD No. 130118-00-0603, the applicable European legal act is: 97/176/EC.
The system to be applied is: 3

5 Technical details necessary for the implementation of the AVCP system, as provided for in the applicable EAD

Technical details necessary for the implementation of the AVCP system are laid down in the control plan deposited with Deutsches Institut für Bautechnik.

Issued in Berlin on 28 March 2019 by Deutsches Institut für Bautechnik

BD Dipl.-Ing. Andreas Kummerow
Head of Department

beglaubigt:
Dewitt

electronic copy of the eta by dibt: eta-11/0284

Annex 1 Specifications of intended use

A.1.1 Use of the HECO-FIX-plus, HECO-TOPIX, HECO-TOPIX-CC and HECO-TOPIX-T screws only for:

- Static and quasi-static loads

A.1.2 Base materials

The screws are used for connections in load bearing timber structures between timber members or between those members and steel members:

- Solid timber (softwood) according to EN 14081-1[1],
- Solid timber of ash, beech or oak hardwood according to EN 14081-1,
- Glued laminated timber (softwood) according to EN 14080[2],
- Glued laminated timber made of ash, beech or oak hardwood according to European Technical Assessments or national provisions that apply at the installation site,
- Laminated veneer lumber LVL made of softwood or beech according to EN 14374[3],
- Beam BauBuche GL75 according to ETA-14/0354,
- Glued solid timber (softwood) according to EN 14080 or national provisions that apply at the installation site,
- Cross-laminated timber (softwood) according to European Technical Assessments or national provisions that apply at the installation site,
- LVL flanges of I-beams according to European Technical Assessments on the basis of ETAG 011.

The screws may be used for connecting the following wood-based panels to the timber members mentioned above:

- Plywood according to EN 636[4] and EN 13986[5],
- Oriented Strand Board, OSB according to EN 300[6] and EN 13986,
- Particleboard according to EN 312[7] and EN 13986,
- Fibreboards according to EN 622-2[8], EN 622-3[9] and EN 13986,
- Cement-bonded particle boards according to EN 634-2[10] and EN 13986,
- Solid-wood panels according to EN 13353[11] and EN 13986.

Wood-based panels shall only be arranged on the side of the screw head.

HECO screws with an outer thread diameter of at least 6 mm may be used for the fixing of thermal insulation material on top of rafters or on timber members in vertical façades.

HECO-TOPIX-CC screws and fully threaded HECO-TOPIX screws may be used for compression and tension reinforcing of timber structures perpendicular to the grain.

electronic copy of the eta by dibt: eta-11/0284

1	EN 14081-1:2005+A1:2011	Timber structures – Strength graded structural timber with rectangular cross section – Part 1: General requirements
2	EN 14080:2013	Timber structures - Glued laminated timber and glued solid timber - Requirements
3	EN 14374:2004	Timber structures - Structural laminated veneer lumber - Requirements
4	EN 636:2012+A1:2015	Plywood - Specifications
5	EN 13986:2004+A1:2015	Wood-based panels for use in construction - Characteristics, evaluation of conformity and marking
6	EN 300:2006	Oriented strand boards (OSB) – Definition, classification and specifications
7	EN 312:2010	Particleboards - Specifications
8	EN 622-2:2004	Fibreboards – Specifications – Part 2: Requirements for hardboards
9	EN 622-3:2004	Fibreboards - Specifications - Part 3: Requirements for medium boards
10	EN 634-2:2007	Cement-bonded particleboards – Specifications – Part 2: Requirements for OPC bonded particleboards for use in dry, humid and external conditions
11	EN 13353:2008+A1:2011	Solid wood panels (SWP) – Requirements

A.1.3 Use Conditions (environmental conditions)

The corrosion protection of the HECO screws is specified in Annex A.2.6. With regards to the use and the environmental conditions, the national provisions of the place of installation apply.

A.1.4 Installation provisions

EN 1995-1-1[12] in conjunction with the respective national annex applies for the installation.

Screws made from carbon steel are either driven into the timber member made of softwood or hardwood without pre-drilling or in pre-drilled holes with a diameter according to Table A.1. Screws made from stainless steel are either driven into timber members made of softwood with or without pre-drilling or into timber members made of hardwood in pre-drilled holes. The diameter of the pre-drilled holes according to Table A.1 shall be considered.

The screws are driven into timber members made of ash, beech or oak with a maximum mean density of 750 kg/m³ and into timber members made of LVL made from beech according to EN 14374 or Beam BauBuche GL75 according to ETA-14/0354 with a maximum mean density of 850 kg/m³ in pre-drilled holes with a diameter according to Table A.1.

Table A.1 Diameter of the pre-drilled holes in timber members

Outer thread diameter d [mm]	Diameter of the pre-drilled hole with a tolerance of ± 0.1 mm [mm]	
	Softwood and LVL made of softwood	Ash, beech or oak hardwood, LVL made from beech or Beam BauBuche GL75 according to ETA-14/0354
3,5	2,0	2,5
4,0	2,5	3,0
4,5	3,0	3,0
5,0	3,0	3,5
6,0	4,0	4,0
8,0	5,0	6,0
10,0	6,0	7,0

electronic copy of the eta by dibt: eta-11/0284

[12] EN 1995-1-1:2004+A1:2008+A2:2014 Eurocode 5: Design of timber structures – Part 1-1: General - Common rules and rules for buildings

The Maximum penetration length of the threaded part of HECO-TOPIX screws made from carbon steel in non-predrilled ash, beech or oak hardwood and beech LVL is given in Table A.2. If HECO-TOPIX screws made from carbon steel are driven in two members, one consisting of ash, beech or oak hardwood or beech LVL and the other of spruce, the added penetration length of the thread must not exceed the limit values of Table A.2.

Table A.2 Maximum penetration length of the threaded part of HECO-TOPIX screws made from carbon steel in non-predrilled ash, beech or oak hardwood or beech LVL/ Beam BauBuche GL75 acc. to ETA-14/0354 or in combinations of ash, beech or oak hardwood or beech LVL/ Beam BauBuche GL75 and spruce

Outer thread diameter d [mm]	Maximum penetration length of the threaded part of the screws [mm]
5.0	50
6.0	60
8.0	80
10.0	70

The screw holes in steel members shall be pre-drilled with an adequate diameter greater than the outer thread diameter.

A minimum of two screws shall be used for connections in load bearing timber structures. This does not apply for special situations specified in National Annexes to EN 1995-1-1.

Only one screw may be used in structural connections when the minimum penetration length of the screw is 20 · d, the screw is only axially loaded and the angle between screw axis and grain direction is $\alpha \geq 15°$. The load-bearing capacity of the screw shall be reduced by 50 %. If the screw is used as tensile or compressive reinforcement of timber structures perpendicular to the grain no reduction of the load-bearing capacity of the screw is required.

If screws with an outer thread diameter d ≥ 8 mm are driven into the timber member without pre-drilling, the structural solid or glued laminated timber, laminated veneer lumber and glued solid timber members shall be from spruce, pine, fir or ash, beech or oak hardwood or beech LVL/ Beam BauBuche GL75 acc. to ETA-14/0354 considering the maximum penetration length according to Table A.2.

In the case of fastening battens on thermal insulation material on top of rafters the screws shall be driven in the rafter through the battens and the thermal insulation material without pre-drilling in one sequence.

Countersunk head screws may be used with washers according to Annex 6. After inserting the screw the washers shall touch the surface of the timber member completely. Screws made from carbon steel shall be used with washers made from carbon steel and screws made from stainless steel shall be used with washers made from stainless steel.

By fastening screws in timber members the head of the screws shall be flush with the surface of the timber member. For pan head, raised countersunk head, flange head and hexagonal head the head part remains unconsidered.

electronic copy of the eta by dibt: eta-11/0284

Annex 2 Characteristic load-bearing capacity values of the HECO screws

Table A.2.1 Characteristic load-bearing capacities of HECO-FIX-plus and HECO-TOPIX screws

Outer thread diameter [mm]		**3.5**	**4.0**	**4.5**	**5.0**	**6.0**	**8.0**	**10.0**
Characteristic yield moment $M_{y,k}$ [Nm]	Carbon steel	2.3	2.8	4.5	5.9	9.5	20.0	36.0
	Stainless steel	1.9	2.8	3.4	4.4	7.1	17.0	30.0
Characteristic tensile strength $f_{tens,k}$ [kN]	Carbon steel	3.8	4.7	6.4	7.9	11.3	20.0	30.0
	Stainless steel	2.9	3.8	4.8	5.9	7.5	15.0	22.0
Characteristic torsional strength $f_{tor,k}$ [Nm]	Carbon steel	2.2	2.9	4.5	6.5	11.0	25.0	42.0
	Stainless steel	2.0	2.9	3.5	5.0	7.0	19.0	35.0

Table A.2.2 Characteristic load-bearing capacities of HECO-TOPIX-CC and HECO-TOPIX-T screws

Outer thread diameter [mm]		**HECO-TOPIX-CC**		**HECO-TOPIX-T**	
		6.0/ 6.5	**8.0/ 8.5**	**8.0**	**10.0**
Characteristic yield moment $M_{y,k}$ [Nm]	Carbon steel hardened	9.5	20.0	20.0	36.0
	Stainless steel	-	-	15.0	27.0
Characteristic tensile strength $f_{tens,k}$ [kN]	Carbon steel hardened	10.0	18.0	20.0	25.0
	Stainless steel	-	-	14.0	22.0
Characteristic torsional strength $f_{tor,k}$ [Nm]	Carbon steel hardened	10.0	23.0	24.0	42.0
	Stainless steel	-	-	18.0	37.0

electronic copy of the eta by dibt: eta-11/0284

A.2.1 General

All HECO screws achieve a bending angle α of at least $45/d^{0.7} + 20$, where d is the outer thread diameter of the screws.

The minimum penetration length of the threaded part of the screw l_{ef} shall be

$$l_{ef} = \min \begin{cases} \dfrac{4 \cdot d}{\sin \alpha} \\ 20 \cdot d \end{cases} \qquad (2.1)$$

where

α angle between screw axis and grain direction

d outer thread diameter of the screw.

The outer thread diameter of screws inserted in cross-laminated timber shall be at least 6 mm. The inner thread diameter d_1 of the screws shall be greater than the maximal width of the gaps in the layer.

A.2.2 Laterally loaded screws

A.2.2.1 General

The outer thread diameter d shall be used as effective diameter of the screw according to EN 1995-1-1.
The embedding strength for the screws in timber members or in wood-based panels shall be taken from EN 1995-1-1 or from national provisions that apply at the installation site unless otherwise specified in the following.

A.2.2.2 Solid timber, glued laminated timber and glued solid timber

The embedding strength for screws in non-pre-drilled holes in softwood or in ash, beech or oak hardwood arranged at an angle between screw axis and grain direction of $0° \leq \alpha \leq 90°$ is:

$$f_{h,k} = \frac{0.082 \cdot \rho_k \cdot d^{-0.3}}{2.5 \cdot \cos^2\alpha + \sin^2\alpha} \quad [N/mm^2] \qquad (2.2)$$

The embedding strength for screws in pre-drilled holes in softwood or in ash, beech or oak hardwood arranged at an angle between screw axis and grain direction of $0° \leq \alpha \leq 90°$ is:

$$f_{h,k} = \frac{0.082 \cdot \rho_k \cdot (1 - 0.01 \cdot d)}{2.5 \cdot \cos^2\alpha + \sin^2\alpha} \quad [N/mm^2] \qquad (2.3)$$

where

ρ_k Characteristic density of the timber member, for ash, beech and oak $\rho_k \leq 590$ kg/m³

d Outer thread diameter of the screw [mm]

α Angle between screw axis and grain direction, $0° \leq \alpha \leq 90°$.

electronic copy of the eta by dibt: eta-11/0284

A.2.2.3 Laminated veneer lumber

The embedding strength for screws in non-pre-drilled holes in softwood LVL arranged at an angle between screw axis and grain direction, 0° ≤ α ≤ 90° is:

$$f_{h,k} = \frac{0.082 \cdot \rho_k \cdot d^{-0.3}}{(2.5 \cdot \cos^2 \alpha + \sin^2 \alpha)(1.5 \cdot \cos^2 \beta + \sin^2 \beta)} \quad [\text{N/mm}^2] \qquad (2.4)$$

and accordingly for screws in pre-drilled holes in softwood LVL arranged at an angle between screw axis and grain direction, 0° ≤ α ≤ 90°:

$$f_{h,k} = \frac{0.082 \cdot \rho_k \cdot (1 - 0.01 \cdot d)}{(2.5 \cdot \cos^2 \alpha + \sin^2 \alpha)(1.5 \cdot \cos^2 \beta + \sin^2 \beta)} \quad [\text{N/mm}^2] \qquad (2.5)$$

Where

ρ_k characteristic timber density of the softwood LVL [kg/m³], ρ_k ≤ 500 kg/m³,

d outer thread diameter of the screw [mm],

α angle between screw axis and grain direction (0° ≤ α ≤ 90°),

β angle between screw axis and the LVL's wide face (0° ≤ β ≤ 90°).

The embedding strength for screws in pre-drilled or in non-pre-drilled holes in Beech LVL according to EN 14374 or in Beam BauBuche GL75 according to ETA-14/0354 arranged at an angle between screw axis and grain direction, 0° ≤ α ≤ 90° is:

$$f_{h,k} = \frac{0.082 \cdot \rho_k \cdot d^{-0.15}}{(2.5 \cdot \cos^2 \alpha + \sin^2 \alpha) \cdot k_\varepsilon \cdot k_\beta} \quad [\text{N/mm}^2] \qquad (2.6)$$

Where

ρ_k characteristic density of Beech LVL or Beam BauBuche GL75 [kg/m³], ρ_k ≤ 730 kg/m³

d outer thread diameter of the screw [mm],

α angle between screw axis and grain direction, 0° ≤ α ≤ 90°,

k_ε $= (0.5 + 0.024 \cdot d) \cdot \sin^2 \varepsilon + \cos^2 \varepsilon$, (2.7)

ε angle between load and grain direction, 0° ≤ ε ≤ 90°,

k_β $= 1.2 \cdot \cos^2 \beta + \sin^2 \beta$, (2.8)

β angle between screw axis and wide face of LVL or Beam BauBuche GL75 member, 0° ≤ β ≤ 90°.

A.2.2.4 Cross laminated timber

The embedding strength for screws arranged in the edge surfaces parallel to the plane of cross laminated timber may be assumed according to equation (2.9) independent of the angle between screw axis and grain direction, 0° ≤ α ≤ 90°:

$$f_{h,k} = 20 \cdot d^{-0,5} \text{ in N/mm}^2 \qquad (2.9)$$

unless otherwise specified in the technical specification of the cross laminated timber.

Where d is the outer thread diameter of the screws in mm.

Equation (2.9) is only valid for softwood layers. The provisions in the European Technical Assessment or in national provisions of the cross laminated timber apply.

electronic copy of the eta by dibt: eta-11/0284

The embedding strength for screws in the wide face of cross laminated timber should be assumed as for solid timber based on the characteristic density of the outer layer. Where applicable, the angle between force and grain direction of the outer layer shall be taken into account. The direction of the lateral force shall be perpendicular to the screw axis and parallel to the wide face of the cross laminated timber.

A.2.3 Axially loaded screws

A.2.3.1 Slip modulus for mainly axially loaded screws

The axial slip modulus K_{ser} of the threaded part of a screw for the serviceability limit state per side shall be taken independent of angle α to the grain as:

$K_{ser} = 25 \cdot d \cdot l_{ef}$ [N/mm] for timber members made from softwood (2.10)

$K_{ser} = 30 \cdot d \cdot l_{ef}$ [N/mm] for timber members made from hardwood (ash, beech, oak) (2.11)

where

d outer thread diameter of the screw [mm]

l_{ef} penetration length of the of the threaded part of the screw in the timber member [mm].

A.2.3.2 Axial withdrawal capacity – Characteristic withdrawal parameter

The characteristic withdrawal capacity in solid timber (softwood or hardwood species ash, beech and oak), glued laminated timber (softwood or hardwood species ash, beech and oak), cross laminated timber or laminated veneer lumber members or Beam BauBuche GL75 according to ETA-14/0354 at an angle of 0° ≤ α ≤ 90° to the grain shall be calculated as:

$$F_{ax,\alpha,Rk} = \frac{n_{ef} \cdot k_{ax} \cdot f_{ax,k} \cdot d \cdot l_{ef}}{k_{\beta}} \cdot \left(\frac{\rho_k}{\rho_a}\right)^{0.8} \quad [N] \qquad (2.12)$$

where

$F_{ax,\alpha,Rk}$ Characteristic withdrawal capacity of a screw group at an angle α to the grain [N]

n_{ef} Effective number of screws according to EN 1995-1-1:2008, clause 8.7.2 (8)

For inclined screws with an angle between shear plane and screw axis 30° ≤ α ≤ 60°:

$$n_{ef} = \max\left\{n^{0.9}; 0.9 \cdot n\right\} \qquad (2.13)$$

For inclined screws as fasteners in mechanically jointed beams or columns or for the fixing of thermal insulation material, $n_{ef} = n$.

n Number of screws acting together in a connection. If crossed pairs of screws are used in timber-to-timber connections, n is the number of crossed pairs of screws.

k_{ax} Factor, taking into account the angle α between screw axis and grain direction

$k_{ax} = 1.0$ for 45° ≤ α ≤ 90°

$k_{ax} = 0.8$ for I-beams with LVL flanges for 45° ≤ α ≤ 90°

$$k_{ax} = a + \frac{b \cdot \alpha}{45°} \qquad (2.14)$$

for 0° ≤ α < 45° (not valid for the flanges of I-beams with LVL flanges)

$$a = \begin{cases} 0.5 & \text{for LVL} \\ 0.3 & \text{for solid timber, glued solid timber, glued laminated timber and cross laminated timber} \end{cases}$$

$$b = \begin{cases} 0.5 & \text{for LVL} \\ 0.7 & \text{for solid timber, glued solid timber, glued laminated timber and cross laminated timber} \end{cases}$$

electronic copy of the eta by dibt: eta-11/0284

Equation (2.12) may be used for angles α between screw axis and grain direction $0° \leq \alpha < 15°$ if the following requirements are fulfilled:

1. The screws are inserted in solid timber, glued laminated timber, glued solid timber or laminated veneer lumber made from softwood or beech.
2. The penetration length of the threaded part of the screws is

$$l_{ef,req} = \min \begin{cases} \dfrac{4 \cdot d}{\sin \alpha} \\ 20 \cdot d \end{cases}$$

3. At least four screws are used in a connection.

k_β $k_\beta = 1.0$ for solid timber, glued solid timber and glued laminated timber

$k_\beta = 1.5 \cdot \cos^2 \beta + \sin^2 \beta$ for laminated veneer lumber (2.15)

$f_{ax,k}$ Characteristic withdrawal parameter at an angle $\alpha = 90°$

- solid timber, glued solid timber, glued laminated timber, cross laminated timber and laminated veneer lumber members with a maximum characteristic density of 590 kg/m³ and ρ_a = 350 kg/m³
  $f_{ax,k}$ = 13.7 N/mm² for HECO-FIX-plus and HECO-TOPIX screws with 3.5 mm ≤ d ≤ 4.5 mm
  $f_{ax,k}$ = 11.8 N/mm² for HECO-FIX-plus and HECO-TOPIX screws with 5.0 mm ≤ d ≤ 10.0 mm
  $f_{ax,k}$ = 10.5 N/mm² for HECO-TOPIX-T screws
  $f_{ax,k}$ = 12.5 N/mm² for HECO-TOPIX-CC screws.
  The characteristic withdrawal parameter is also valid for softwood layers of cross-laminated timber.
- Beech LVL or Beam BauBuche GL75 (ETA-14/0354) members with a density of 590 kg/m³ ≤ ρ_k ≤ 750 kg/m³ and ρ_a = 730 kg/m³
  $f_{ax,k}$ = 35.0 N/mm² for HECO-TOPIX screws with 5.0 mm ≤ d ≤ 8.0 mm
  $f_{ax,k}$ = 30.0 N/mm² for HECO-TOPIX screws with d > 8.0 mm

d outer thread diameter of the screw [mm]

l_{ef} penetration length of the threaded part of the screw [mm]

α angle between grain and screw axis ($0° \leq \alpha \leq 90°$)

β angle between screw axis and the LVL's wide face ($0° \leq \beta \leq 90°$)

ρ_k characteristic density of the timber member [kg/m³]

ρ_a associated density for $f_{ax,k}$ [kg/m³]

For screws penetrating more than one layer of cross laminated timber the different layers may be taken into account proportionally. In the lateral surfaces of the cross laminated timber the screws shall be fully inserted in one layer of cross-laminated timber.

A.2.3.3 Head pull-through capacity – Characteristic head pull-through parameter

The characteristic head pull-through capacity in solid timber (softwood or hardwood species ash, beech and oak), glued laminated timber (softwood or hardwood species ash, beech and oak), cross laminated timber, laminated veneer lumber members made of softwood or beech and wood-based panels shall be calculated as:

$$F_{ax,\alpha,Rk} = n_{ef} \cdot f_{head,k} \cdot d_h^2 \cdot \left(\frac{\rho_k}{350}\right)^{0,8} \text{ [N]} \qquad (2.16)$$

where:

$F_{ax,\alpha,RK}$ Characteristic head pull-through capacity of the connection at an angle $\alpha \geq 30°$ to the grain [N]

electronic copy of the eta by dibt: eta-11/0284

n_{ef} Effective number of screws according to EN 1995-1-1:2008, clause 8.7.2 (8)
For inclined screws with an angle between shear plane and screw axis 30° ≤ α ≤ 60°:
$n_{ef} = \max\left\{n^{0.9}; 0.9 \cdot n\right\}$
For inclined screws as fasteners in mechanically jointed beams or columns or for the fixing of thermal insulation material, $n_{ef} = n$.

n Number of screws acting together in a connection. If crossed pairs of screws are used in timber-to-timber connections, n is the number of crossed pairs of screws.

$f_{head,k}$ Characteristic head pull-through parameter of the screw [N/mm²]

d_h Diameter of the screw head or the washer [mm]. Outer diameter of heads or washers d_h > 32 mm shall only be considered with a nominal diameter of 32 mm.

ρ_k Characteristic density of the timber member or of the wood-based panel [kg/m³], for wood-based panels ρ_k ≤ 380 kg/m³, for softwood LVL ρ_k ≤ 500 kg/m³, for ash, beech and oak ρ_k ≤ 590 kg/m³, for beech LVL ρ_k = 730 kg/m³

The characteristic value of the head pull-through parameter for HECO screws in connection with softwood-based member and for wood-based panel like

- Plywood according to EN 636 and EN 13986
- Oriented Strand Board, OSB according to EN 300 and EN 13986
- Particleboard according to EN 312 and EN 13986
- Fibreboards according to EN 622-2, EN 622-3 and EN 13986
- Cement-bonded particle boards according to EN 634-2 and EN 13986,
- Solid-wood panels according to EN 13353 and EN 13986

with a thickness of more than 20 mm and for ρ_a = 350 kg/m³ is

$f_{head,k}$ = 9.4 N/mm² for 23 mm < d_h ≤ 35 mm
$f_{head,k}$ = 14.0 N/mm² for d_h ≤ 23 mm.

Characteristic head pull-through parameter for HECO screws in connections with ash, beech and oak hardwood timber with a thickness of more than 20 mm and for ρ_a = 350 kg/m³ is:

$f_{head,k}$ = 15 N/mm² for d_h > 20 mm and for washers;
$f_{head,k}$ = 20 N/mm² for d_h ≤ 20 mm.

Characteristic head pull-through parameter for HECO screws in connections with Beech LVL or Beam BauBuche GL75 (ETA-14/0354) with 590 kg/m³ ≤ ρ_k ≤ 750 kg/m³ for ρ_a = 350 kg/m³ and with a thickness of at least 40 mm is:

$f_{head,k}$ = 32.0 N/mm² for d_h ≤ 20 mm. This head pull-through parameter may also be used for 20 mm < d_h ≤ 35 mm

The head diameter shall be equal to or greater than $1.8 \cdot d_s$, where d_s is the smooth shank or the inner thread diameter. Otherwise the characteristic head pull-through capacity in equation (8.40b) of EN 1995-1-1 is for all wood-based materials: $F_{ax,\alpha,RK} = 0$.

For wood based panels with a thickness 12 mm ≤ t ≤ 20 mm the characteristic value of the head pull-through parameter for HECO screws is:

$f_{head,k}$ = 8 N/mm²

For wood based panels with a thickness of less than 12 mm the characteristic head pull-through capacity for HECO screws shall be based on a characteristic value of the head pull-through parameter of 8 N/mm², and limited to 400 N complying with the minimum thickness of the wood based panels of 1.2·d, with d as outer thread diameter and the values in Table A.2.3.

electronic copy of the eta by dibt: eta-11/0284

Table A.2.3 Minimum thickness of wood based panels

Wood based panel	**Minimum thickness [mm]**
Plywood	6
Fibreboards (hardboards and medium boards)	6
Oriented Strand Boards, OSB	8
Particleboards	8
Cement-bonded particle board	8
Solid wood Panels	12

For HECO-TOPIX-T screws and fully threaded HECO-TOPIX screws the withdrawal capacity of the thread in the timber member with the screw head may be taken into account instead of the head pull-through capacity:

$$F_{ax,\alpha,Rk} = \max \begin{cases} f_{head,k} \cdot d_h^2 \cdot \left(\frac{\rho_k}{350}\right)^{0,8} \\ k_{ax} \cdot f_{ax,90,k} \cdot l_{ef,k} \cdot d \cdot \left(\frac{\rho_k}{350}\right)^{0,8} \end{cases} \quad (2.17)$$

For HECO-TOPIX-CC screws the withdrawal capacity of the thread in the timber member with the screw head shall be taken into account according to equation (2.18).

$$F_{ax,\alpha,Rk} = k_{ax} \cdot f_{ax,90,k} \cdot l_{ef,k} \cdot d \left(\frac{\rho_k}{350}\right)^{0,8} \quad (2.18)$$

where

d_h diameter of the screw head [mm],

ρ_k characteristic density of the timber member with the screw head [kg/m³], for wood-based panels $\rho_k \leq 380$ kg/m³, for softwood LVL $\rho_k \leq 500$ kg/m³, for hardwood $\rho_k \leq 590$ kg/m³, for beech LVL $\rho_k \leq 750$ kg/m³,

k_{ax} factor according to clause A.2.3.2,

$l_{ef,k}$ penetration length of the threaded part of the screw in the timber member with the screw head [mm], $l_{ef,k} \geq 4 \cdot d$

In steel-to-timber connections the head pull-through capacity is not governing.

electronic copy of the eta by dibt: eta-11/0284

A.2.3.4 Compressive capacity of HECO-TOPIX-CC screws and fully threaded HECO-TOPIX screws - Characteristic yield strength

The design axial capacity $F_{ax,Rd}$ of HECO-TOPIX-CC screws and fully threaded HECO-TOPIX screws embedded in solid timber, glued solid timber or glued laminated timber made from softwood with an angle between screw axis and grain direction of 30° ≤ α ≤ 90° is the minimum of the axial resistance against pushing-in and the buckling resistance of the screw.

$$F_{ax,Rd} = \min \left\{ f_{ax,d} \cdot d \cdot \ell_{ef} ; \kappa_c \cdot N_{pl,d} \right\} \quad (2.19)$$

$f_{ax,d}$ design value of the axial withdrawal capacity of the threaded part of the screw [N/mm²]

d outer thread diameter of the screw [mm]

l_{ef} penetration length of the threaded part of the screw in the timber member [mm]

$$\kappa_c = 1 \qquad \text{for } \bar{\lambda}_k \le 0{,}2 \quad (2.20)$$

$$\kappa_c = \frac{1}{k + \sqrt{k^2 - \bar{\lambda}_k^2}} \qquad \text{for } \bar{\lambda}_k > 0{,}2 \quad (2.21)$$

$$k = 0{,}5 \cdot \left[1 + 0{,}49 \cdot \left(\bar{\lambda}_k - 0{,}2 \right) + \bar{\lambda}_k^2 \right] \quad (2.22)$$

and a relative slenderness ratio $\bar{\lambda}_k = \sqrt{\frac{N_{pl,k}}{N_{ki,k}}}$ (2.23)

where:

$N_{pl,k}$ characteristic plastic normal force related to the net cross-section of the inner thread diameter: :

$$N_{pl,k} = \pi \cdot \frac{d_1^2}{4} \cdot f_{y,k} \quad (2.24)$$

$f_{y,k}$ characteristic yield strength, $f_{y,k}$ = 900 N/mm² for HECO-TOPIX-CC screws and fully threaded HECO-TOPIX screws

d_1 inner thread diameter of the screw [mm]

$$N_{pl,d} = \frac{N_{pl,k}}{\gamma_{M1}} \quad (2.25)$$

γ_{M1} partial factor according to EN 1993-1-1 in conjunction with the particular national annex

characteristic ideal elastic buckling load:

$$N_{ki,k} = \sqrt{c_h \cdot E_S \cdot I_S} \quad [N] \quad (2.26)$$

elastic foundation of the screw:

$$c_h = \left(0.19 + 0.012 \cdot d\right) \cdot \rho_k \cdot \left(\frac{90° + \alpha}{180°} \right) \quad [N/mm^2] \quad (2.27)$$

ρ_k characteristic density of the timber member [kg/m³],

α angle between screw axis and grain direction, 30° ≤ α ≤ 90°

modulus of elasticity:

E_s = 210.000 N/mm²

second moment of area:

$$I_s \quad \frac{\pi \cdot d_1^4}{64} \quad [mm^4] \quad (2.28)$$

electronic copy of the eta by dibt: eta-11/0284

A.2.4 Spacing, end and edge distances of the screws and minimum thickness of the wood based material

A.2.4.1 Laterally and/or axially loaded screws

Screws in pre-drilled holes

For HECO screws in pre-drilled holes the minimum spacings, end and edge distances are given in EN 1995-1-1, clause 8.3.1.2 and Table 8.2 as for nails in pre-drilled holes. Here, the outer thread diameter d shall be considered.

HECO-FIX-plus and HECO-TOPIX screws

Minimum thickness for structural timber members made from solid timber, glued laminated timber, glued solid timber, laminated veneer lumber and cross laminated timber is t = 24 mm for screws with d ≤ 6 mm, t = 30 mm for screws with d = 8 mm and t = 40 mm for screws with d = 10 mm.

HECO-TOPIX-CC and HECO-TOPIX-T screws

Minimum thickness for structural timber members made from solid timber, glued laminated timber, glued solid timber, laminated veneer lumber and cross laminated timber is t = 30 mm for screws with d ≤ 8 mm and t = 40 mm for screws with d = 10 mm. In the case the spacing parallel to the grain and the end distance is at least 25 · d the minimum thickness for structural members is t = 24 mm for screws with d = 6 mm.

Screws in non pre-drilled holes

For HECO screws minimum spacing and distances are given in EN 1995-1-1, clause 8.3.1.2 and Table 8.2 as for nails in non-predrilled holes. Here, the outer thread diameter d shall be considered.

For Douglas fir members minimum spacing and distances parallel to the grain shall be increased by 50%.

Minimum distances from loaded or unloaded ends shall be at least 15·d for screws with outer thread diameter d > 8 mm and timber thickness t < 5·d.

Minimum distances from the unloaded edge perpendicular to the grain may be reduced to 3·d also for timber thickness t < 5·d, if the spacing parallel to the grain and the end distance is at least 25·d.

Minimum thickness for non-predrilled structural softwood members is t = 24 mm for screws with outer thread diameter d < 8 mm, t = 30 mm for screws with outer thread diameter d = 8 mm and t = 40 mm for screws with outer thread diameter d = 10 mm, if the spacing parallel to the grain and the end distance is at least 25 · d.

In all other cases, minimum thicknesses for HECO screws in non-predrilled softwood timber members are given in EN 1995-1-1, clause 8.3.1.2 as for nails in non-predrilled holes.

A.2.4.2 Only axially loaded screws

For HECO screws loaded only axially, the following minimum spacings, end and edge distances apply alternatively to paragraph A.2.4.1 for solid timber, glued laminated timber and similar glued products:

Spacing a_1 in a plane parallel to grain:	$a_1 = 5 \cdot d$
Spacing a_2 perpendicular to a plane parallel to grain:	$a_2 = 2.5 \cdot d$
End distance of the centre of gravity of the threaded part in the timber member:	$a_{1,CG} = 5 \cdot d$
Edge distance of the centre of gravity of the threaded part in the timber member:	$a_{2,CG} = 4 \cdot d$
Product of spacing a_1 and a_2:	$a_1 \cdot a_2 = 25 \cdot d^2$

For screws in non pre-drilled holes a minimum timber thickness of 12 d and a minimum width of 8 d or 60 mm, whichever is the greater, are required.

For a crossed screw couple in solid timber, glued laminated timber and similar glued products or in laminated veneer lumber the minimum spacing between the crossing screws is 1.5·d. Appropriate means have to ensure that the crossed screw threads do not touch each other when being screwed in the timber member.

Are the spacing, end and edge distances less than the distances and thicknesses given in EN 1995-1-1 the verification of resistance according to EN 1995-1-1, clause 8.7.2 (1) the failure along the circumference of a group of screws has to be considered also for connections without steel plates.

electronic copy of the eta by dibt: eta-11/0284

Minimum distances from the unloaded edge perpendicular to the grain of I-joist flanges made of LVL may be reduced to 2·d for d ≤ 8 mm and timber thickness t ≥ 39 mm, if the spacing parallel to the grain and the end distance are at least 10·d. The screws shall be centrically inserted in the I-joist flanges.

A.2.4.3 Cross laminated timber

The minimum requirements for spacing, end and edge distances of screws in the plane or edge surfaces of cross laminated timber are summarised in Table A.2.4. The definition of spacing, end and edge distance is shown in Figure 2.1 and Figure 2.2. The minimum spacing, end and edge distances in the edge surfaces are independent of the angle between screw axis and grain direction. They may be used based on the following conditions:

- Minimum thickness of cross laminated timber: 10 · d
- Minimum penetration depth in the edge surface: 10 · d

Table A.2.4 Minimum spacing, end and edge distances of screws in the plane or edge surfaces of cross laminated timber

	a_1	$a_{3,t}$	$a_{3,c}$	a_2	$a_{4,t}$	$a_{4,c}$
Plane surface (see Figure A.2.1)	4 · d	6 · d	6 · d	2,5 · d	6 · d	2,5 · d
Edge surface (see Figure A.2.2)	10 · d	12 · d	7 · d	4 · d	6 · d	3 · d

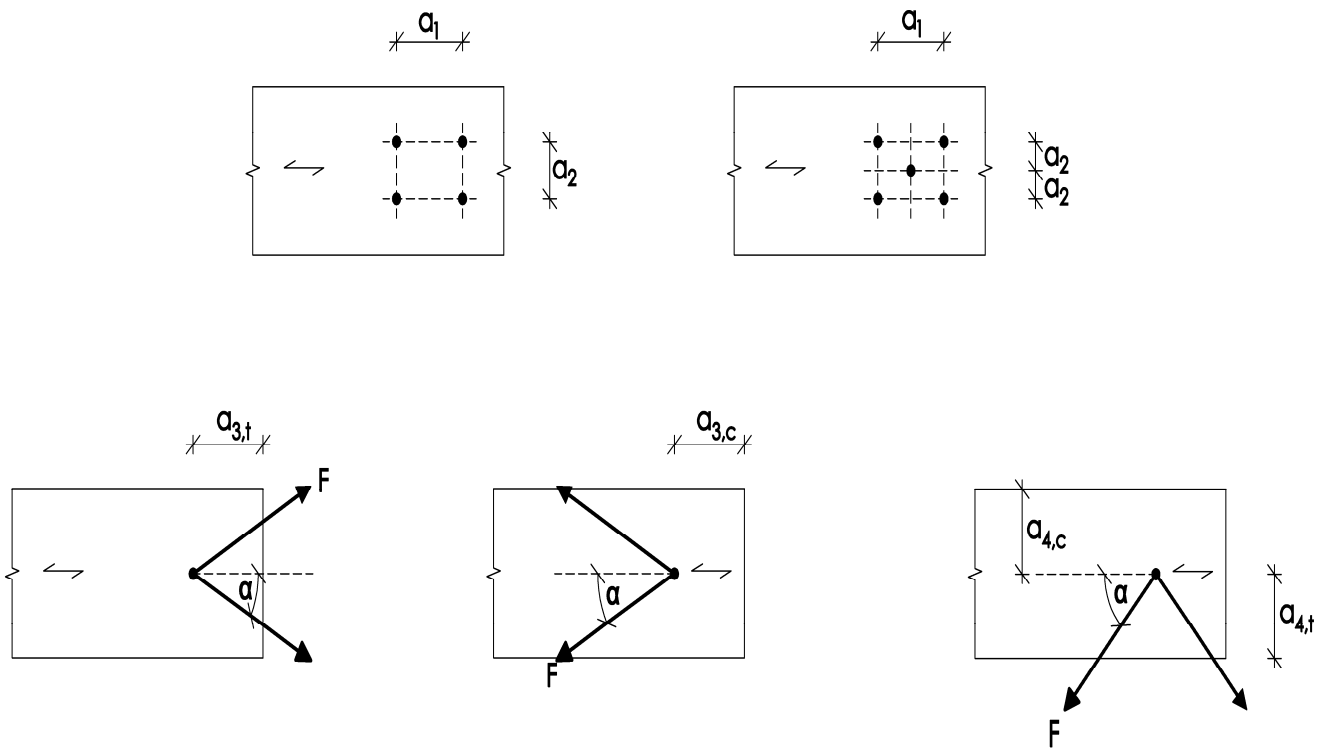

Figure A.2.1 Definition of spacing, end and edge distances in the plane surface

electronic copy of the eta by dibt: eta-11/0284

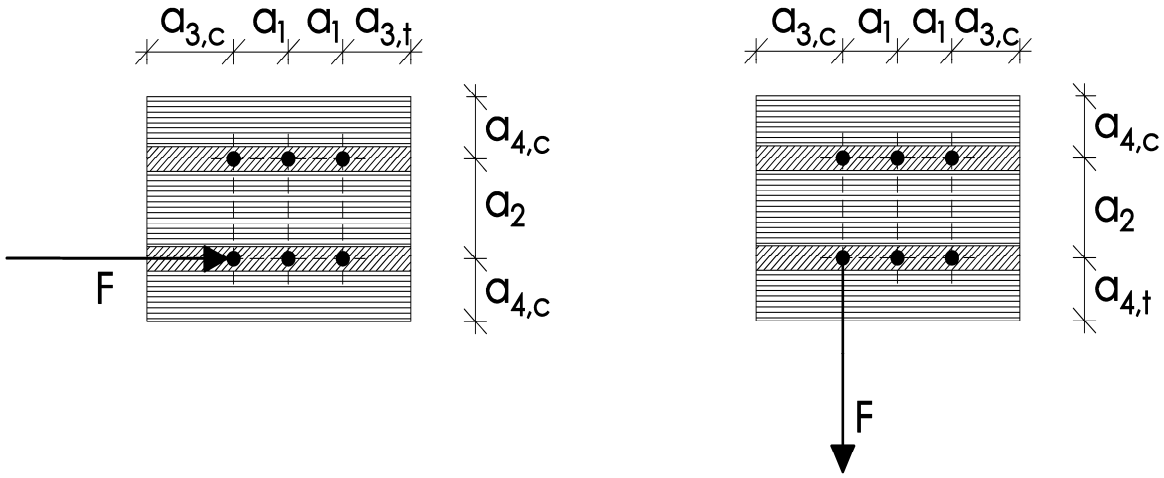

Figure A.2.2 Definition of spacing, end and edge distances in the edge surface

A.2.5 Insertion moment

The ratio between the characteristic torsional strength $f_{tor,k}$ and the mean value of insertion moment $R_{tor,mean}$ fulfills the requirement for all screws.

A.2.6 Durability against corrosion

Screws and washers made from carbon steel may have the coatings according to Table A.2.5

Table A.2.5 Coatings of the screws

Coating		**Minimum thickness of the coating [µm]**
electrogalvanised	blue chromated	5
	yellow chromated	
	black chromated	
	olive chromated	
zinc-nickel coating, galvanic cladded, chromated		8
zinc flake basecoat		12

Steel no. 1.4567, 1.4578, 1.4462, 1.4539 and 1.4529 are used for screws made from stainless steel.
Washers are made from steel no. 1.4305 or 1.4401.
Contact corrosion shall be avoided.

electronic copy of the eta by dibt: eta-11/0284

Use examples of HECO-TOPIX-T, HECO-TOPIX-CC screws and fully threaded HECO-TOPIX screws

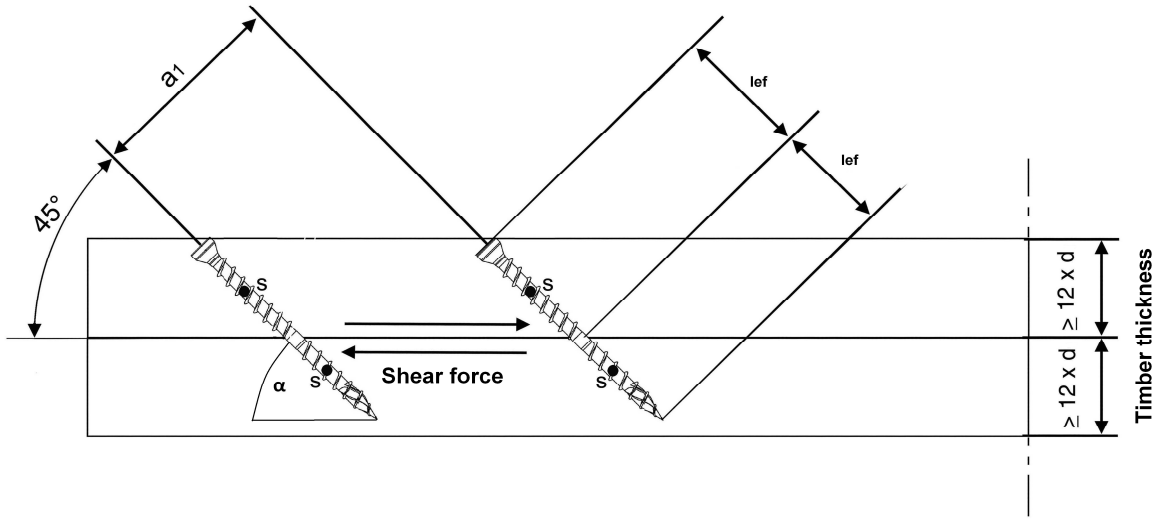

S – Centroid of the part of the screw in the timber

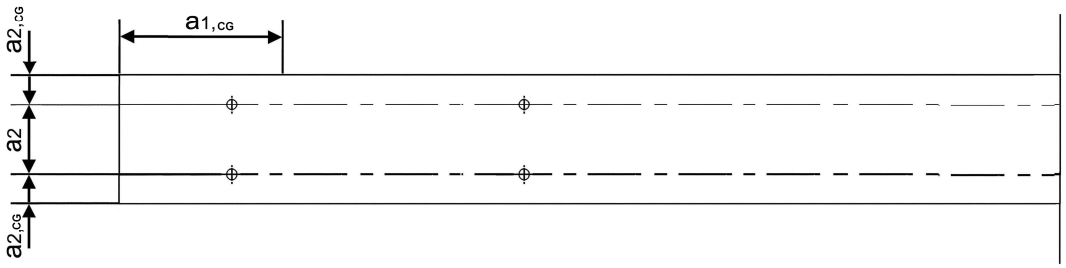

electronic copy of the eta by dibt: eta-11/0284

HECO-FIX-plus, HECO-TOPIX, HECO-TOPIX-T and HECO-TOPIX-CC screws	Annex 2
Use examples	

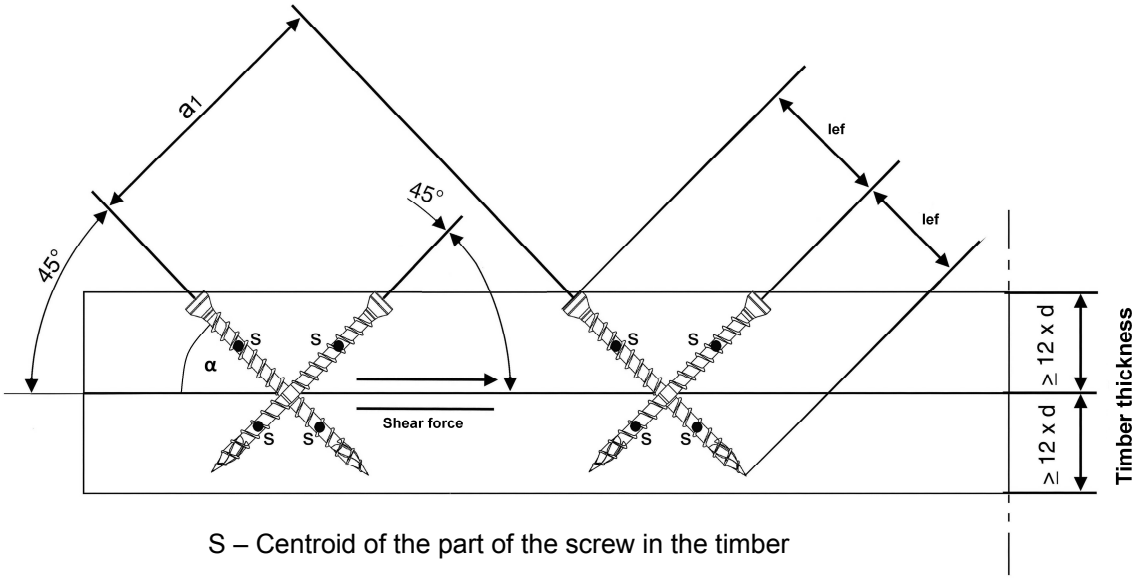

S – Centroid of the part of the screw in the timber

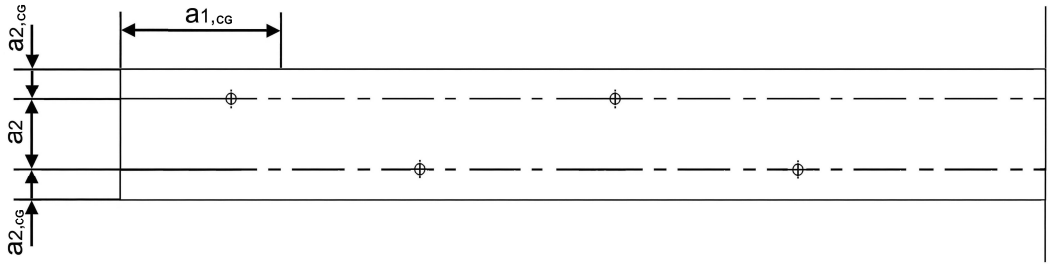

electronic copy of the eta by dibt: eta-11/0284

HECO-FIX-plus, HECO-TOPIX, HECO-TOPIX-T and HECO-TOPIX-CC screws	Annex 2
Example of use of the screws	

ANNEX 3 Compression reinforcement perpendicular to the grain

A.3.1 General

Only HECO-TOPIX-CC screws and fully threaded HECO-TOPIX screws shall be used for compression reinforcement perpendicular to the grain. The provisions are valid for reinforcing timber members made from solid timber, glued solid timber and glued laminated timber made from softwood.
The compression force shall evenly be distributed to the screws used as compression reinforcement.
The screws are driven into the timber member perpendicular to the contact surface under an angle between the screw axis and the grain direction of 45° to 90°. The screw heads must be flush with the timber surface.

A.3.2 Design

For the design of reinforced contact areas the following conditions must be met independently of the angle between the screw axis and the grain direction.

The design resistance of a reinforced contact area is:

$$R_{90,d} = \min \begin{Bmatrix} k_{c,90} \cdot B \cdot \ell_{ef,1} \cdot f_{c,90,d} + n \cdot \min\left\{R_{ax,d}; \kappa_c \cdot N_{pl,d}\right\} \\ B \cdot \ell_{ef,2} \cdot f_{c,90,d} \end{Bmatrix} \quad (3.1)$$

where:

$k_{c,90}$ Parameter according to EN 1995-1-1:2004+A1: 2008, 6.1.5

B Bearing width [mm]

$\ell_{ef,1}$ Effective contact length according to EN 1995-1-1:2004+A1: 2008, 6.1.5 [mm]

$f_{c,90,d}$ Design compressive strength perpendicular to the grain [N/mm²]

n Number of reinforcing screws, $n = n_0 \cdot n_{90}$

n_0 Number of reinforcing screws arranged in a row parallel to the grain

n_{90} Number of reinforcing screws arranged in a row perpendicular to the grain

$$R_{ax,d} = f_{ax,d} \cdot d \cdot \ell_{ef} \quad [N] \quad (3.2)$$

$f_{ax,d}$ design value of the axial withdrawal capacity of the threaded part of the screw [N/mm²]

d outer thread diameter of the screw [mm]

κ_c according to annex 2, chapter "compressive capacity"

$N_{pl,d}$ according to annex 2, chapter "compressive capacity" [N]

$\ell_{ef,2}$ Effective contact length in the plane of the screw tips (see Figure A.3.1) [mm]

$\ell_{ef,2} = \{\ell_{ef} + (n_0 - 1) \cdot a_1 + \min(\ell_{ef} ; a_{1,CG})\}$ for end supports (see Figure A.3.1 left)

$\ell_{ef,2} = \{2 \cdot \ell_{ef} + (n_0 - 1) \cdot a_1\}$ for intermediate supports (see Figure A.3.1 right)

ℓ_{ef} Penetration length of the threaded part of the screw in the timber member [mm]

a_1 Spacing a_1 in a plane parallel to grain, see chapter A.2.4.2 [mm]

$a_{1,CG}$ End distance of the centre of gravity of the threaded part in the timber member, see chapter A.2.4.2 [mm]

electronic copy of the eta by dibt: eta-11/0284

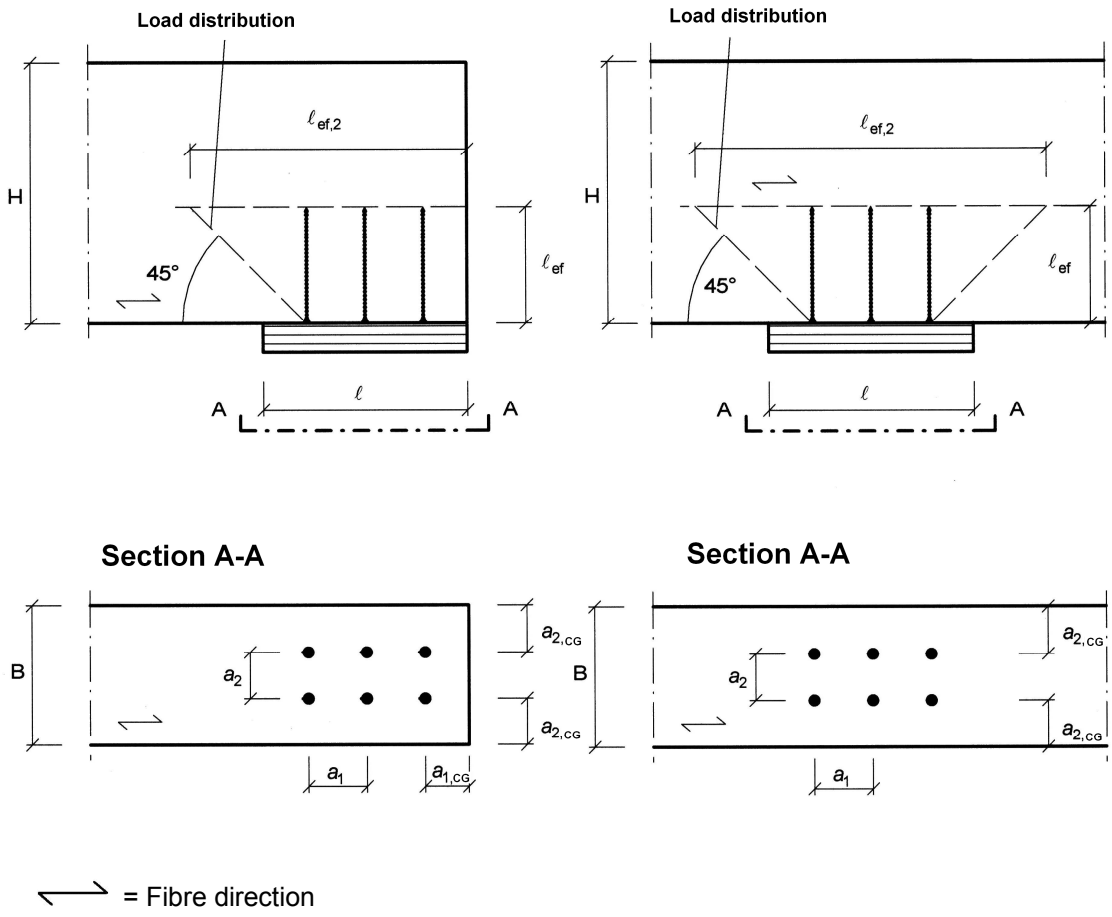

Figure A.3.1 Reinforced end support (left) and reinforced intermediate support (right)

electronic copy of the eta by dibt: eta-11/0284

ANNEX 4 Tensile reinforcement perpendicular to grain

A.4.1 General

Only HECO-TOPIX-CC screws and fully threaded HECO-TOPIX screws shall be used for tensile reinforcement perpendicular to the grain.
The screws are driven into the timber member perpendicular to the contact surface under an angle between the screw axis and the grain direction of 90°.
The provisions regarding tensile reinforcement perpendicular to the grain are valid for the following timber members:

- solid timber made of softwood or of the hardwood species ash, beech or oak,
- glued laminated timber made of softwood or of the hardwood species ash, beech or oak,
- glued solid timber made of softwood,
- laminated veneer lumber made of softwood.

For the design and construction of the tensile reinforcement of timber members perpendicular to the grain, the provisions at the place of installation shall apply. As examples connection forces at an angle to the grain and notched beam supports are given in the following.

Note: For example, in Germany the provisions of standard DIN EN 1995-1-1/NA: 2013-08, NCI NA.6.8 and amendments shall be taken into account.

A minimum of two screws shall be used for tensile reinforcement perpendicular to the grain. Only one screw may be used when the minimum penetration depth of the screws below and above the potential crack is 20 · d where d is the outer thread diameter of the screw.

A.4.2 Design

A.4.2.1 Connection forces at an angle to the grain

The axial capacity of a reinforcement of a timber member loaded by a connection force perpendicular to the grain shall fulfil the following condition:

$$\frac{\left[1-3\cdot\alpha^2+2\cdot\alpha^3\right]\cdot F_{90,d}}{F_{ax,Rd}}\leq 1 \qquad (4.1)$$

where

$F_{90,d}$ design value of the force component perpendicular to the grain,
α = a/h
a see Figure A.4.1
h = member depth
$F_{ax,Rd}$ = min $\{f_{ax,d}\cdot d\cdot \ell_{ef};\ F_{t,Rd}\}$
$f_{ax,d}$ design value of the axial withdrawal capacity of the threaded part of the screw
d outer thread diameter of the screw
ℓ_{ef} smaller value of the penetration depth below or above the potential crack,
$F_{t,Rd}$ design value of the tensile resistance of the screw = $f_{tens,d}$

Outside the connection only one screw each in longitudinal direction of the beam shall be taken into account.

electronic copy of the eta by dibt: eta-11/0284

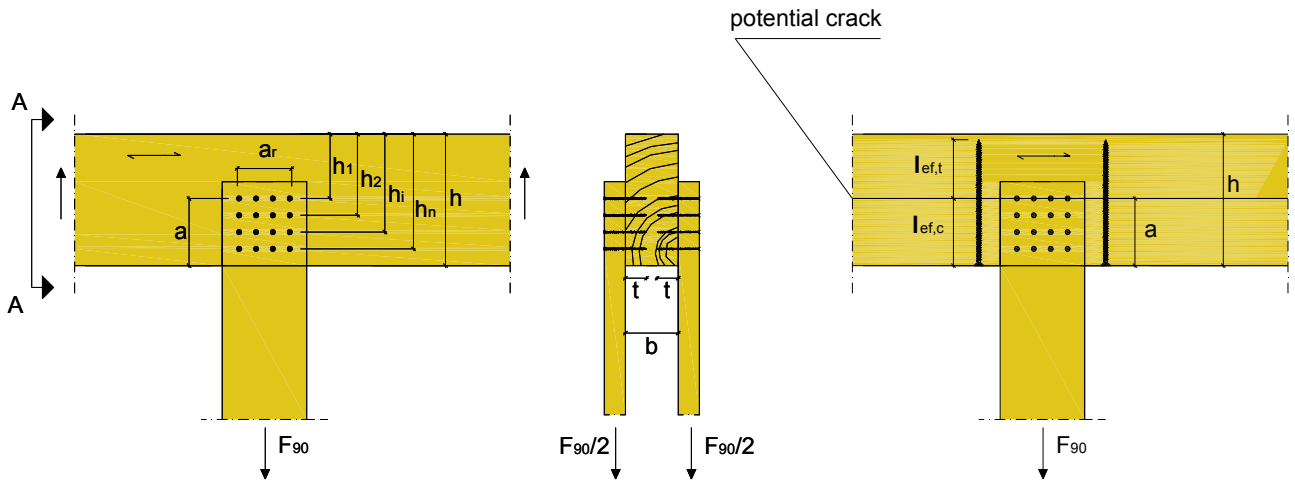

Figure A.4.1: Example for tensile reinforcement of a connection force perpendicular to the grain

electronic copy of the eta by dibt: eta-11/0284

HECO-FIX-plus, HECO-TOPIX, HECO-TOPIX-T and HECO-TOPIX-CC screws	Annex 4
Tensile reinforcement perpendicular to the grain	

A.4.2.2 Notched beam supports

The axial capacity of a reinforcement of a notched beam support shall fulfil the following condition:

$$\frac{1{,}3 \cdot V_d \cdot \left[3 \cdot (1-\alpha)^2 - 2 \cdot (1-\alpha)^3\right]}{F_{ax,Rd}} \leq 1 \qquad (4.2)$$

where

V_d design value of the shear force

α = h_e/h

h = member depth

$F_{ax,Rd}$ = min $\{f_{ax,d} \cdot d \cdot \ell_{ef}; F_{t,Rd}\}$

$f_{ax,d}$ design value of the axial withdrawal capacity of the threaded part of the screw

d outer thread diameter of the screw

ℓ_{ef} smaller value of the penetration depth below or above the potential crack, the total minimum penetration depth of the screw shall be $2 \cdot l_{ef}$

$F_{t,Rd}$ design value of the tensile resistance of the screws = $f_{tens,d}$

Only one screw in longitudinal direction of the beam shall be taken into account.

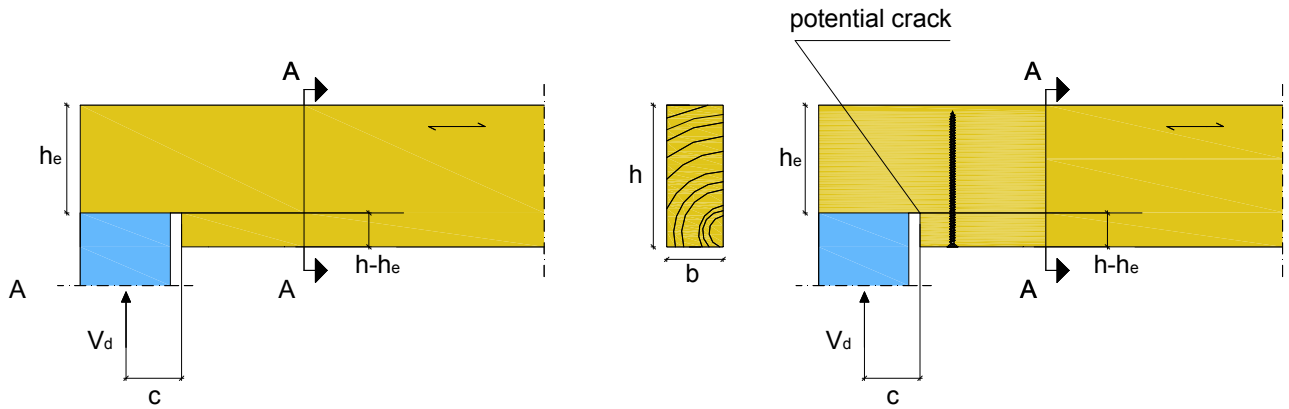

Figure A.4.2: Example for tensile reinforcement of a notched beam support

electronic copy of the eta by dibt: eta-11/0284

ANNEX 5 – Fastening of thermal insulation material on top of rafters

A.5.1 General

HECO screws with an outer thread diameter of at least 6 mm may be used for the fixing of thermal insulation material on top of rafters or on wood-based members in vertical façades. In the following, the meaning of the word rafter includes wood-based members with inclinations between 0° and 90°.

The thickness of the thermal insulation material may be up to 400 mm. The thermal insulation material shall be applicable as insulation on top of rafters or on façades according to national provisions that apply at the installation site.

The battens have to be from solid timber (softwood) according to EN 338/ EN 14081-1. The minimum thickness t and the minimum width b of the battens are given in table A.5.1:

Table A.5.1 Minimum thickness and minimum width of the battens

Outer thread diameter [mm]	Minimum thickness t [mm]	Minimum width b [mm]
6 and 8	30	50
10	40	60

The minimum width of the rafters is 60 mm.

A reduced unloaded edge distance $a_{4,c}$ of 2.5 d of axially loaded screws in rafters may be used under the following conditions:

- Characteristic density of the rafter: $\rho_k \leq 460$ kg/m³
- Outer thread diameter of the screw: 6 mm ≤ d ≤ 8 mm
- Depth h of the rafter parallel to screw axis: h ≥ 16 d
- Width b of the rafter perpendicular to screw axis: b ≥ 5 d
- Loaded or unloaded end distance: $a_{3,t/c} \geq 25$ d
- Spacing parallel to the grain: $a_1 \geq 25$ d

Friction forces shall not be considered for the design of the characteristic axial load of the screws.

The anchorage of wind suction forces as well as the bending stresses of the battens shall be considered for design. Screws perpendicular to the grain of the rafter (angle $\alpha = 90$ °) may be arranged where required considering the design of the battens.

A.5.2 Parallel inclined screws and thermal insulation material in compression

A.5.2.1 Mechanical model

The system of rafter, thermal insulation material on top of rafter and battens parallel to the rafter may be considered as a beam on elastic foundation. The batten represents the beam, and the thermal insulation material on top of the rafter the elastic foundation. The minimum compression stress of the thermal insulation material at 10 % deformation, measured according to EN 826[1], shall be $\sigma_{(10\,\%)} = 0{,}05$ N/mm². The batten is loaded perpendicular to the axis by point loads F_b. Further point loads F_s are from the shear load of the roof due to dead and snow load, which are transferred from the thread under the screw head or from the screw head into the battens.

Only HECO-FIX-plus, HECO-TOPIX and HECO-TOPIX-T screws shall be used in this system.

electronic copy of the eta by dibt: eta-11/0284

[1] EN 826:2013 Thermal insulating products for building applications - Determination of compression behaviour

Instead of battens the following wood-based panels may be used to cover the thermal insulation material if they are suitable for that use:

- Plywood according to EN 636 and EN 13986,
- Oriented Strand Board, OSB according to EN 300 and EN 13986,
- Particleboard according to EN 312 and EN 13986
- Fibreboards according to EN 622-2, EN 622-3 and EN 13986.

Only screws with countersunk head and raised countersunk head shall be used for fixing wood-based panels on rafters with thermal insulation material as interlayer.

The minimum thickness of the wood-based panels shall be 22 mm.

The word batten includes the meaning of wood-based panels in the following.

electronic copy of the eta by dibt: eta-11/0284

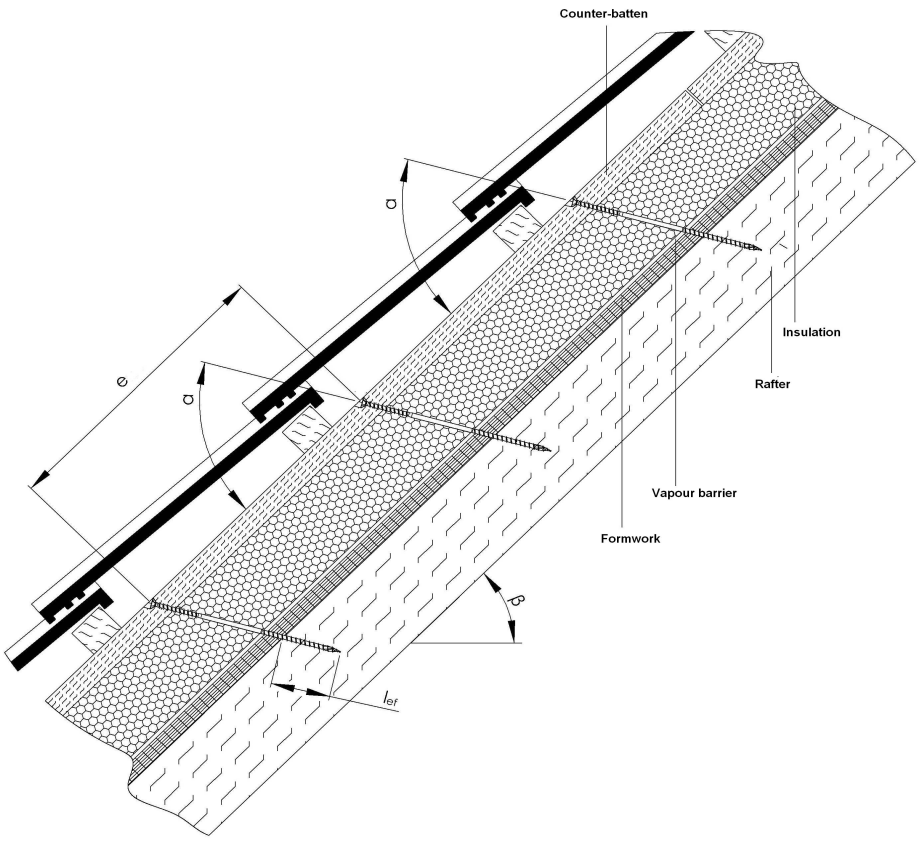

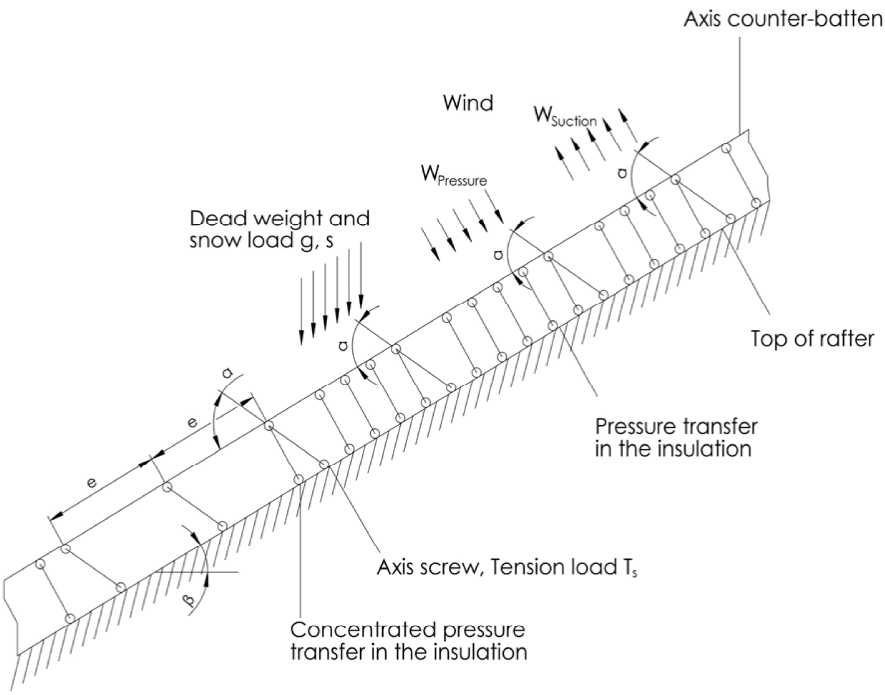

Figure A.5.1 Fastening of the thermal insulation material on top of rafters - structural system for parallel inclined screws

HECO-FIX-plus, HECO-TOPIX, HECO-TOPIX-T and HECO-TOPIX-CC screws	Annex 5
Fastening of thermal insulation material on top of rafters	

electronic copy of the eta by dibt: eta-11/0284

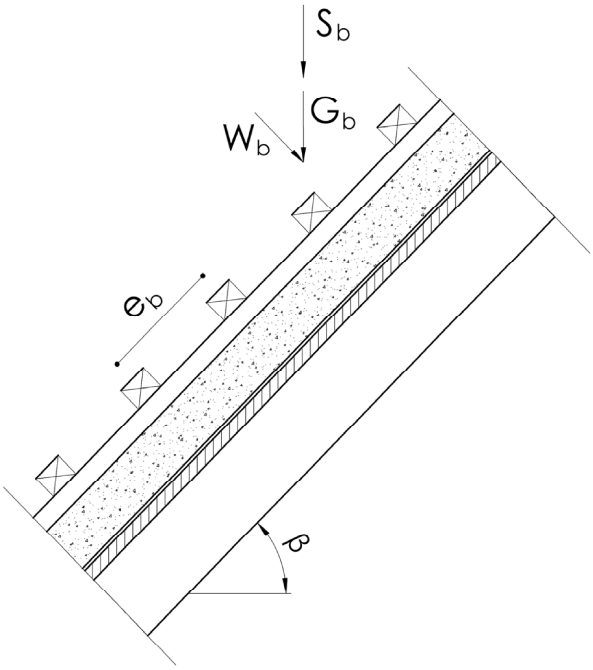

Figure A.5.2 Point loads F_b perpendicular to the battens

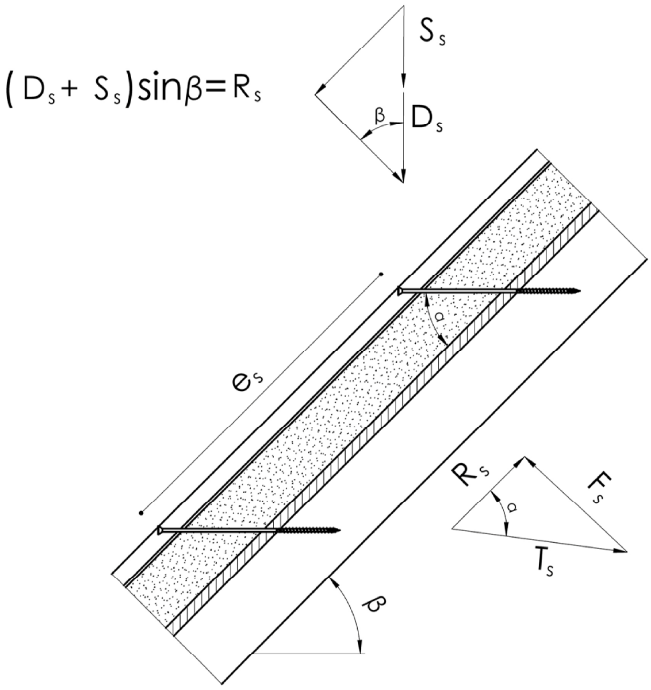

Figure A.5.3 Point loads F_s perpendicular to the battens, load application in the area of the screw heads

HECO-FIX-plus, HECO-TOPIX, HECO-TOPIX-T and HECO-TOPIX-CC screws	Annex 5
Fastening of thermal insulation material on top of rafters	

electronic copy of the eta by dibt: eta-11/0284

A.5.2.2 Design of the battens

The characteristic values of the bending stresses are calculated as:

$$M_k = \frac{(F_{b,k} + F_{s,k}) \cdot l_{char}}{4} \quad (5.1)$$

where

$$l_{char} = \text{Characteristic length } l_{char} = \sqrt[4]{\frac{4 \cdot EI}{w_{ef} \cdot K}} \quad (5.2)$$

EI = Bending stiffness of the batten
K = modulus of subgrade reaction
w_{ef} = Effective width of the thermal insulation material
$F_{b,k}$ = Characteristic value of the point loads perpendicular to the battens
$F_{s,k}$ = Characteristic value of the point loads perpendicular to the battens, load application in the area of the screw heads

The modulus of subgrade reaction K may be calculated from the modulus of elasticity E_{HI} and the thickness t_{HI} of the thermal insulation material if the effective width w_{ef} of the thermal insulation material under compression is known. Due to the load extension in the thermal insulation material the effective width w_{ef} is greater than the width of the batten or rafter, respectively. For further calculations, the effective width w_{ef} of the thermal insulation material may be determined according to:

$$w_{ef} = w + t_{HI} / 2 \quad (5.3)$$

where
w = Minimum from width of the batten or rafter, respectively
t_{HI} = Thickness of the thermal insulation material

$$K = \frac{E_{HI}}{t_{HI}} \quad (5.4)$$

The following condition shall be satisfied:

$$\frac{\sigma_{m,d}}{f_{m,d}} = \frac{M_d}{W \cdot f_{m,d}} \leq 1 \quad (5.5)$$

For the calculation of the section modulus W the net cross section shall be considered.

The characteristic value of the shear stresses shall be calculated according to:

$$V_k = \frac{(F_{b,k} + F_{s,k})}{2} \quad (5.6)$$

The following condition need to be satisfied:

$$\frac{\tau_d}{f_{v,d}} = \frac{1.5 \cdot V_d}{A \cdot f_{v,d}} \leq 1 \quad (5.7)$$

For the calculation of the cross section area the net cross section shall be considered.

A.5.2.3 Design of the thermal insulation material

The characteristic value of the compressive stresses in the thermal insulation material shall be calculated according to:

$$\sigma_k = \frac{1{,}5 \cdot F_{b,k} + F_{s,k}}{2 \cdot l_{char} \cdot w} \quad (5.8)$$

The design value of the compressive stress shall not be greater than 110 % of the compressive stress at 10 % deformation calculated according to EN 826.

HECO-FIX-plus, HECO-TOPIX, HECO-TOPIX-T and HECO-TOPIX-CC screws	Annex 5
Fastening of thermal insulation material on top of rafters	

electronic copy of the eta by dibt: eta-11/0284

A.5.2.4 Design of the screws

The screws are loaded predominantly axially. The characteristic value of the axial tension force in the screw may be calculated from the shear loads of the roof R_s:

$$T_{S,k} = \frac{R_{S,k}}{\cos\alpha} \tag{5.9}$$

The load-carrying capacity of axially loaded screws is the minimum design value of the axial withdrawal capacity of the threaded part of the screw, the head pull-through capacity of the screw and the tensile capacity of the screw according to Annex 2.

In order to limit the deformation of the screw head for thermal insulation material with thickness over 220 mm or with compressive stress $\sigma_{(10\%)}$ below 0.12 N/mm², respectively, the axial withdrawal capacity of the screws shall be reduced by the factors k_1 and k_2.

In the case that wood-based panels cover the thermal insulation material equation (5.10) applies:

$$F_{ax,\alpha,Rd} = \min\left\{k_{ax} \cdot f_{ax,90,d} \cdot d \cdot l_{ef,r} \cdot k_1 \cdot k_2 \cdot \left(\frac{\rho_k}{350}\right)^{0.8}; f_{head,d} \cdot d_h^2 \cdot \left(\frac{\rho_k}{350}\right)^{0.8}; \frac{f_{tens,k}}{\gamma_{M2}}\right\} \tag{5.10}$$

In the case that battens cover the thermal insulation material equation (5.11) applies:

$$F_{ax,\alpha,Rd} = \min\begin{cases} k_{ax} \cdot f_{ax,90,d} \cdot d \cdot l_{ef,r} \cdot k_1 \cdot k_2 \cdot \left(\frac{\rho_k}{350}\right)^{0.8} \\ f_{head,d} \cdot d_h^2 \cdot \left(\frac{\rho_k}{350}\right)^{0.8} \\ k_{ax} \cdot f_{ax,90,d} \cdot d \cdot l_{ef,b} \cdot \left(\frac{\rho_k}{350}\right)^{0.8} \\ \frac{f_{tens,k}}{\gamma_{M2}} \end{cases} \tag{5.11}$$

where:

k_{ax}	Factor, taking into account the angle α between screw axis and grain direction according to A.2.3.2
$f_{ax,90,d}$	design value of the axial withdrawal parameter of the threaded part of the screw perpendicular to the grain [N/mm²]
d	outer thread diameter of the screw [mm]
$l_{ef,r}$	penetration length of the threaded part of the screw in the rafter, $l_{ef} \geq 40$ mm
$l_{ef,b}$	penetration length of the threaded part of the screw in the batten [mm]
ρ_k	characteristic density of the wood-based member [kg/m³], for softwood LVL $\rho_k \leq 500$ kg/m³, for ash, beech and oak $\rho_k \leq 590$ kg/m³
α	angle α between screw axis and grain direction, $30° \leq \alpha \leq 90°$
$f_{head,d}$	design value of the head pull-through parameter of the screw [N/mm²]
d_h	head diameter [mm]
$f_{tens,k}$	characteristic tensile capacity of the screw according to annex 2 [N]
γ_{M2}	partial factor according to EN 1993-1-1 in conjunction with the particular national annex

electronic copy of the eta by dibt: eta-11/0284

k_1	min {1; 220/t_{HI}}
k_2	min {1; $\sigma_{10\%}$/0,12}
t_{HI}	thickness of the thermal insulation material [mm]
$\sigma_{10\%}$	compressive stress of the thermal insulation material under 10 % deformation [N/mm²]

If equation (5.10) or (5.11) is fulfilled, the deflection of the battens does not need to be considered when designing the load-carrying capacity of the screws.

electronic copy of the eta by dibt: eta-11/0284

A.5.3 Alternatively inclined screws and thermal insulation material not in compression

A.5.3.1 Mechanical model

Depending on the screw spacing and the arrangement of tensile and compressive screws with different inclinations the battens are loaded by significant bending moments. The bending moments are derived based on the following assumptions:

- The tensile and compressive loads in the screws are determined based on equilibrium conditions from the actions parallel and perpendicular to the roof plane. These actions are constant line loads $q_{\perp}$ and $q_{||}$.
- The screws act as hinged columns supported 10 mm within the batten or rafter, respectively. The effective column length consequently equals the length of the screw between batten and rafter plus 20 mm.
- The batten is considered as a continuous beam with a constant span ℓ = A + B. The compressive screws constitute the supports of the continuous beam while the tensile screws transfer concentrated loads perpendicular to the batten axis.

The screws are predominantly loaded in withdrawal or compression, respectively. The characteristic values of the screw's normal forces are determined based on the loads parallel and perpendicular to the roof plane:

Compressive screw: $$N_{c,k} = e \cdot \left(-\frac{q_{II,k}}{\cos\alpha_1 + \sin\alpha_1 / \tan\alpha_2} - \frac{q_{\perp,k} \cdot \sin(90° - \alpha_2)}{\sin(\alpha_1 + \alpha_2)} \right) \quad (5.12)$$

Tensile screw: $$N_{t,k} = e \cdot \left(\frac{q_{II,k}}{\cos\alpha_2 + \sin\alpha_2 / \tan\alpha_1} - \frac{q_{\perp,k} \cdot \sin(90° - \alpha_1)}{\sin(\alpha_1 + \alpha_2)} \right) \quad (5.13)$$

e	distance of the perpendicular to the grain inserted screws according to Figure 5.4
$q_{II,k}$	characteristic value of the loads parallel to the roof plane
$q_{\perp,k}$	characteristic value of the loads perpendicular to the roof plane
α	Angle α_1 and α_2 between screw axis and grain direction, $30° \le \alpha_1 \le 90°$, $30° \le \alpha_2 \le 90°$

The bending moments in the batten follow from the constant line load $q_{\perp}$ and the load components perpendicular to the batten from the tensile screws. The span of the continuous beam is (A + B). The characteristic value of the load component perpendicular to the batten from the tensile screw is:

$$F_{ZS,k} = e \cdot \left(\frac{q_{II,k}}{1/\tan\alpha_1 + 1/\tan\alpha_2} - \frac{q_{\perp,k} \cdot \sin(90° - \alpha_1) \cdot \sin\alpha_2}{\sin(\alpha_1 + \alpha_2)} \right) \quad (5.14)$$

A positive value for $F_{ZS,k}$ means a load towards the rafter, a negative value a load away from the rafter. The system of the continuous beam is shown in Figure A.5.4.

The battens fixed on the rafter shall be supported perpendicular to the load-bearing plane.

electronic copy of the eta by dibt: eta-11/0284

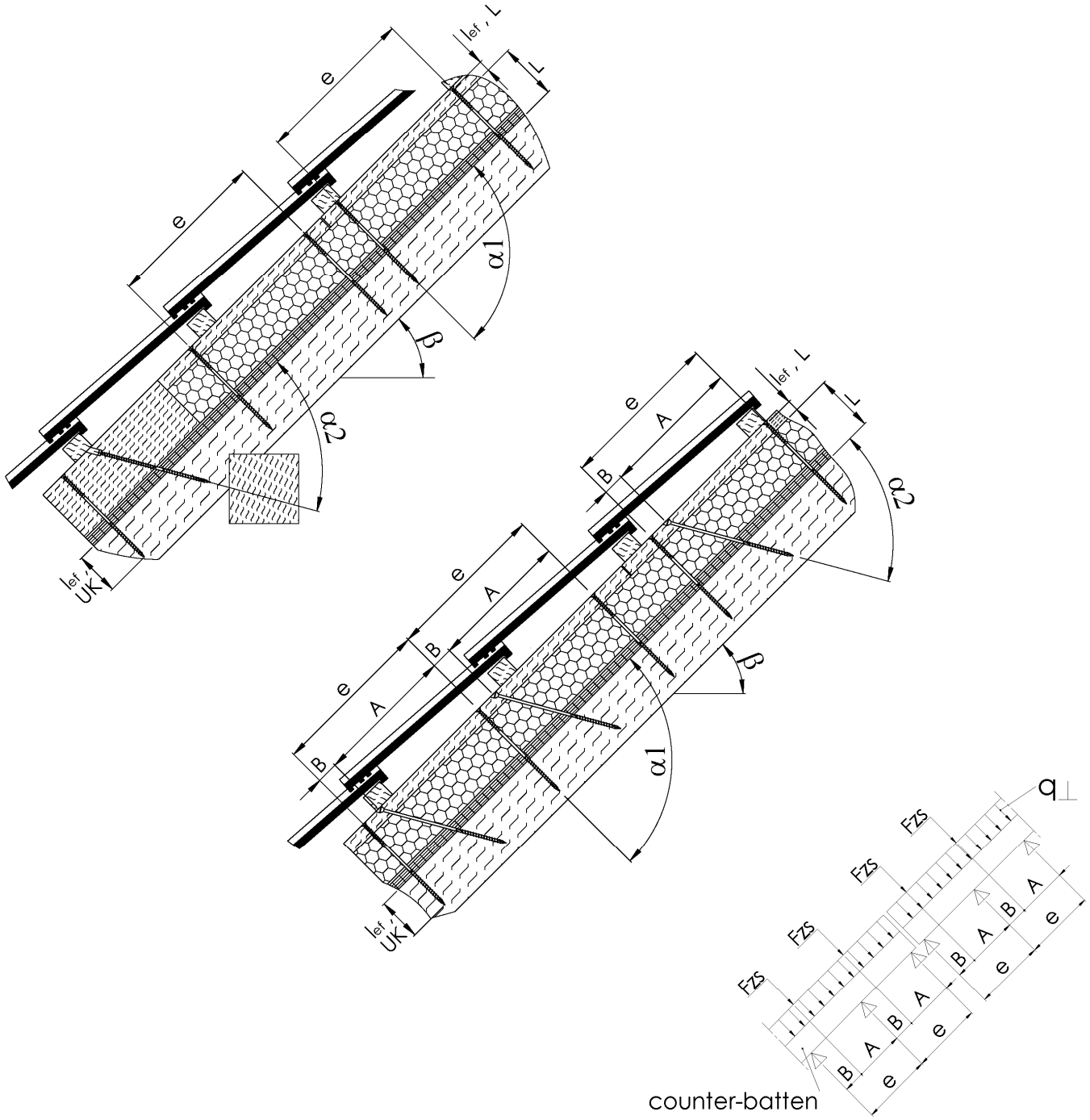

Figure A.5.4 Fastening of thermal insulation material on top of rafters - structural system for alternatively inclined screws and continuous batten under constant line loads from actions on the roof plane $q_{\perp}$ and concentrated loads from tensile screws F_{ZS}

HECO-FIX-plus, HECO-TOPIX, HECO-TOPIX-T and HECO-TOPIX-CC screws	Annex 5
Fastening of thermal insulation material on top of rafters	

electronic copy of the eta by dibt: eta-11/0284

A.5.3.2 Design of the screws

The design value of the load-carrying capacity of the screws shall be calculated according to equation (5.15) and (5.16).

Screws loaded in tension:

$$F_{ax,\alpha,Rd} = \min\left\{k_{ax} \cdot f_{ax,90,d} \cdot d \cdot l_{ef,b} \cdot \left(\frac{\rho_{b,k}}{350}\right)^{0.8};\ k_{ax} \cdot f_{ax,90,d} \cdot d \cdot l_{ef,r} \cdot \left(\frac{\rho_{r,k}}{350}\right)^{0.8};\frac{f_{tens,k}}{\gamma_{M2}}\right\} \qquad (5.15)$$

Screws loaded in compression:

$$F_{ax,\alpha,Rd} = \min\left\{k_{ax} \cdot f_{ax,90,d} \cdot d \cdot l_{ef,b} \cdot \left(\frac{\rho_{b,k}}{350}\right)^{0.8};k_{ax} \cdot f_{ax,90,d} \cdot d \cdot l_{ef,r} \cdot \left(\frac{\rho_{r,k}}{350}\right)^{0.8};\frac{\kappa_c \cdot N_{pl,k}}{\gamma_{M1}}\right\} \qquad (5.16)$$

where:

k_{ax}	factor, taking into account the angle α between screw axis and grain direction according to A.2.3.2
$f_{ax,90,d}$	design value of the axial withdrawal parameter of the threaded part of the screw perpendicular to the grain in the batten [N/mm²]
d	outer thread diameter of the screw [mm]
$l_{ef,b}$	penetration length of the threaded part of the screw in the batten [mm]
$l_{ef,r}$	penetration length of the threaded part of the screw in the rafter, $l_{ef} \geq 40$ mm
$\rho_{b,k}$	characteristic density of the batten [kg/m³], for softwood LVL $\rho_k \leq 500$ kg/m³, for ash, beech and oak $\rho_k \leq 590$ kg/m³
$\rho_{r,k}$	characteristic density of the rafter [kg/m³], for softwood LVL $\rho_k \leq 500$ kg/m³, for ash, beech and oak $\rho_k \leq 590$ kg/m³
α	angle α_1 or α_2 between screw axis and grain direction, $30° \leq \alpha_1 \leq 90°$, $30° \leq \alpha_2 \leq 90°$
$f_{tens,k}$	characteristic tensile capacity of the screw according to annex 2 [N]
γ_{M1}, γ_{M2}	partial factor according to EN 1993-1-1 in conjunction with the particular national annex
$\kappa_c \cdot N_{pl,k}$	buckling capacity of the screw according to table A.5.2 [N]

electronic copy of the eta by dibt: eta-11/0284

Table A.5.2 Characteristic buckling capacity of the screws $\kappa_c \cdot N_{pl,k}$ in kN

Free screw length L of the screws between batten and rafter [mm]	**HECO-TOPIX-CC**		**HECO-TOPIX-T**		**Fully threaded HECO-TOPIX screws**			**HECO-TOPIX-T**	
	Carbon steel							Stainless steel	
	Outer thread diameter d [mm]								
	6.0	**8.0**	**8.0**	**10.0**	**6.0**	**8.0**	**10.0**	**8.0**	**10.0**
	$\kappa_c \cdot N_{pl,k}$ [kN]								
≤ 100	1.11	3.73	6.37	11.70	1.11	3.73	8.07	5.69	10.1
120	0.84	2.85	4.92	9.22	0.84	2.85	6.27	4.51	8.20
140	0.66	2.25	3.90	7.38	0.66	2.25	4.99	3.64	6.73
160	0.53	1.81	3.16	6.03	0.53	1.81	4.05	2.98	5.59
180	0.43	1.50	2.61	5.00	0.43	1.50	3.35	2.48	4.69
200	0.36	1.25	2.20	4.22	0.36	1.25	2.82	2.10	3.99
220	0.30	1.06	1.87	3.60	0.30	1.06	2.41	1.79	3.42
240	0.26	0.91	1.61	3.12	0.26	0.91	2.08	1.55	2.97
260	0.23	0.79	1.40	2.72	0.23	0.79	1.81	1.36	2.60
280	0.20	0.70	1.23	2.39	0.20	0.70	1.59	1.19	2.29
300	0.17	0.61	1.09	2.11	0.17	0.61	1.40	1.06	2.04
320	0.16	0.55	0.97	1.88	0.16	0.55	1.25	0.94	1.83
340	0.14	0.49	0.87	1.69	0.14	0.49	1.12	0.85	1.64
360	0.12	0.44	0.78	1.53	0.12	0.44	1.01	0.76	1.49
380	0.11	0.40	0.71	1.38	0.11	0.40	0.92	0.69	1.35
400	0.10	0.36	0.65	1.26	0.10	0.36	0.83	0.63	1.23

electronic copy of the eta by dibt: eta-11/0284

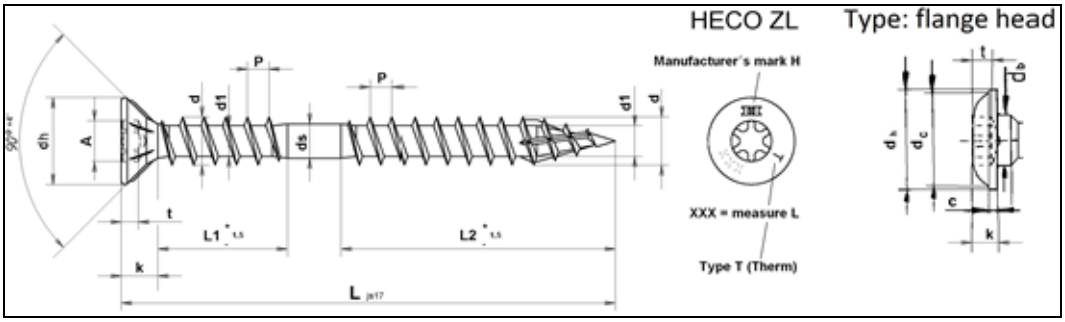

Nom. diameter							∅ 8,0		∅ 10,0	
d	upper Tol. lower Tol.						8,3 +0,4 -0,1		10 +0,5 -0,1	
*d*1	upper Tol. lower Tol.						5,75 5,35		7,1 6,3	
dh	upper Tol. lower Tol.						14,8 +0 -0,5		18,5 +0 -0,5	
ds	upper Tol. lower Tol.						6,2 5,8		7,4 7,0	
P ±10%							6,0		7,5	
k	upper Tol. lower Tol.						8,0 6,0		9,0 7,0	
Recess.							HD/T-40		HD/T-40	
t	upper Tol. lower Tol.						3,15 2,85		3,85 3,4	
A							6,8		6,8	
Type: Flange head										
dh	upper Tol. lower Tol.						17,5 +1 -1		22,5 +1 -1	
dc	upper Tol. lower Tol.						Ca. 16		Ca. 20	
db	upper Tol. lower Tol.						8 +0,5 -0,5		10 +0,5 -0,5	
K	upper Tol. lower Tol.						4,0 3,3		4,2 3,5	
C	upper Tol. lower Tol.						2,0 1,5		2,3 1,7	
t	upper Tol. lower Tol.						3,5 2,6		4,0 3,0	
L		L1	L2	L1	L2	L1	L2	L1	L2	L1	L2
160								60	70		
200								60	100	60	100
240								60	100	60	100
260								60	100	60	100
280								60	100	60	100
300								60	100	60	100
330								60	100	60	100
340								60	100	60	100
360								60	100	60	100
380								60	100	60	100
400								60	100	60	100
420								60	100	60	100
450								60	100	60	100
460								60	100	60	100
500								60	100	60	100

Other screw lengths with $L_{min} \leq L \leq L_{max}$ and other thread lengths lg ≥ 4*d up to max. standard thread length, are allowed

HECO-FIX-plus, HECO-TOPIX, HECO-TOPIX-T and HECO-TOPIX-CC screws

HECO-TOPIX-T Countersunk Head with underhead thread
T-Drive, alternatively flange head
Carbon and stainless steel

Annex 6.1

electronic copy of the eta by dibt: eta-11/0284

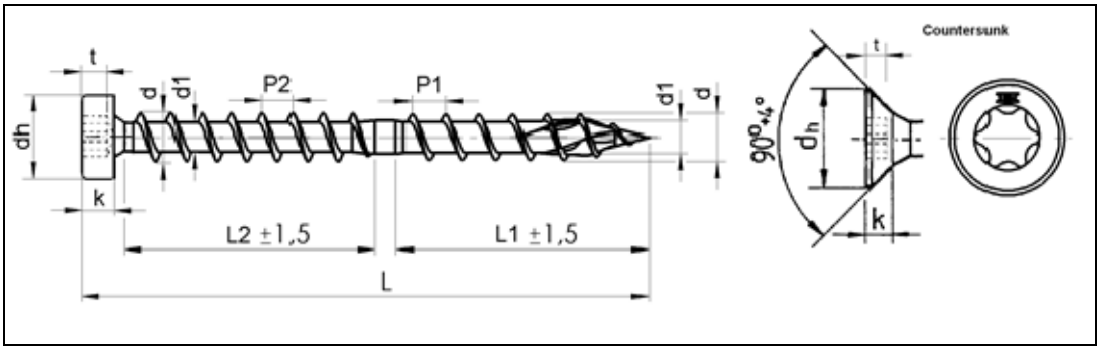

Nom. diameter					Ø 6,5	Ø 8,5
Screwed portion L1						
d	upper Tol. lower Tol.				6,0 +0,1 -0,2	8,0 +0,1 -0,2
d_1	upper Tol. lower Tol.				3,95 3,65	5,45 5,15
P1	upper Tol. lower Tol.				4,5	6,0
Screwed portion L2						
d	upper Tol. lower Tol.				6,5 +0,2 -0,15	8,5 +0,2 -0,15
d_1	upper Tol. lower Tol.				3,75 3,45	5,2 4,85
Cylinder head						
k	upper Tol. lower Tol.				4,2 3,8	5,3 5,1
dh	upper Tol. lower Tol.				9,0 +0,2 -0,2	12,0 +0,2 -0,2
t	upper Tol. lower Tol.				2,8 2,5	3,6 3,3
Recess					HD/T-30	HD/T-40
Countersunk						
k	upper Tol. lower Tol.				3,6 3,1	4,7 4,0
dh	upper Tol. lower Tol.				11,8 +0 -0,6	14,8 +0 -0,5
t	upper Tol. lower Tol.				2,6 2,1	3,15 2,85
Recess					HD/T-30	HD/T-40

L	Ø 6,5	Ø 8,5	P2 (Ø 6,5)	P2 (Ø 8,5)		L1	L2	L1	L2
100	+-1,75	+-1,75	4,25	5,4		45	45	45	45
150	+-2,0	+-1,85	4,33	5,6		70	70	70	70
190	+-2,3	+-2,3	4,36	5,68		90	90	90	90
215	+-2,3	+-2,3	4,38	5,71		100	100	100	100
270		+-2,6		5,76				122	122
300		+-2,6		5,79				138	138
350		+-2,85		5,82				158	158

Other screw lengths with $L_{min} \leq L \leq L_{max}$ and other thread lengths lg $\geq$ 4*d up to max. standard thread length, are allowed

HECO-FIX-plus, HECO-TOPIX, HECO-TOPIX-T and HECO-TOPIX-CC screws

HECO-TOPIX CC
T-Drive
Carbon steel

Annex 6.2

electronic copy of the eta by dibt: eta-11/0284

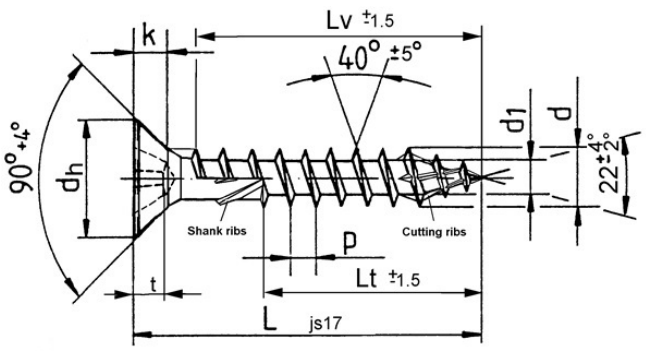

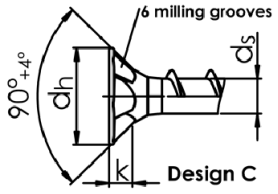

Nom. diameter		Ø 3,5		Ø 4,0		Ø 4,5		Ø 5,0		Ø 6,0		Ø 8,0		Ø 10,0	
d	upper tol.	3,6 +0,2		4,1 +0,2		4,6 +0,2		5,2 +0,2		6,2 +0,3		8,0 +0,4		10 +0,45	
	lower tol.	-0,2		-0,2		-0,2		-0,3		-0,3		-0,1		-0,1	
d_1	upper tol.	2,4		2,65		2,95		3,4		3,95		5,45		6,65	
	lower tol.	2,05		2,3		2,55		3,0		3,55		5,05		6,2	
d_h	upper tol.	6,8 +0,3		7,8 +0,3		8,7 +0,4		9,4 +0,4		11,8 +0		14,8 +0		18,5 +0	
	lower tol.	-0,3		-0,3		-0,4		-0,4		-0,6		-0,5		-0,5	
d_s	upper tol.	2,65		2,95		3,3		3,65		4,4		5,8		7,1	
	lower tol.	2,45		2,75		3,1		3,45		4,2		5,6		6,9	
P ±10%		2,6		3,0		3,4		3,8		4,5		6,0		7,5	
k	upper tol.	2,1		2,5		2,7		3,0		3,6		4,7		6,0	
	lower tol.	1,8		2,1		2,3		2,6		3,1		4,0		5,2	
Recess Z		2		2		2		2		3		4		4	
t	upper tol.	2,06		2,51		3,1		3,45		3,45		4,32		5,65	
	lower tol.	1,7		2,05		2,64		3,0		3,0		3,86		5,2	
m		4,0		4,4		4,9		5,3		6,6		8,5		9,8	
L		Lv	Lt	Lv	Lt	Lv	Lt	Lv	Lt	Lv	Lt	Lv	Lt	Lv	Lt
20		16													
25		21		20		20		20							
30		26	18*	25	20	24	20	24		24					
35		31	21*	30	20	29	20	29	20	28					
40		36	24*	35	25	34	25	34	23	33					
45		41	27*	40	25	39	25	39	28	38					
50		46	31*	45	30	44	30	44	28	43	30				
55				50	35	49	30	49	38	48	30				
60				54	35	54	35	54	38	53	35				
65					40	60	35	59	38	58	35				
70					40	64	40	64	42		40				
75						69	40	69	42		40				
80						74	50	74	47		45		60		60
90								84	55		55		60		60
100								94	60		60		60		80
110									60	L_V=L-d	60	L_V=L-d	70	L_V=L-d	80
120									60		60		70		80
130											60		70		80
140		Lv and „*“without shank ribs									60		70		80
150											60		70		80
160											60		70		100
180											60		100		100
190											60		100		100
200											60		100		100
220 - 380		with 20mm grading									60		100		100
380 - 500		with 20mm grading									60		100		100

Other screw lengths with $L_{min} \leq L \leq L_{max}$ and other thread lengths lg $\geq$ 4*d up to max. standard thread length, are allowed

HECO-FIX-plus, HECO-TOPIX, HECO-TOPIX-T and HECO-TOPIX-CC screws

HECO-TOPIX Countersunk Head
Pozi-Drive
Carbon steel

Annex 6.3

electronic copy of the eta by dibt: eta-11/0284

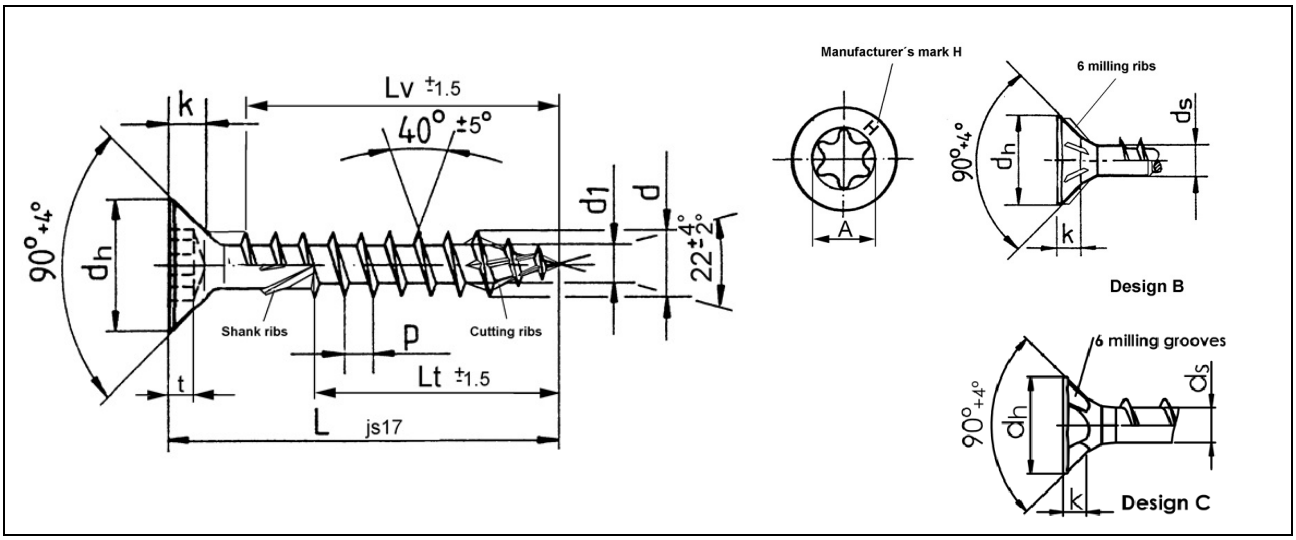

Nom. diameter		Ø 3,5		Ø 4,0		Ø 4,5		Ø 5,0		Ø 6,0		Ø 8,0		Ø 10,0	
d	upper tol.	3,6 +0,2		4,1 +0,2		4,6 +0,2		5,2 +0,2		6,2 +0,3		8,0 +0,4		10 +0,45	
	lower tol.	-0,2		-0,2		-0,2		-0,3		-0,3		-0,1		-0,1	
d_1	upper tol.	2,4		2,65		2,95		3,4		3,95		5,45		6,65	
	lower tol.	2,05		2,3		2,55		3,0		3,55		5,05		6,2	
d_h	upper tol.	6,8 +0,3		7,8 +0,3		8,7 +0,4		9,4 +0,4		11,8 +0		14,8 +0		18,5 +0	
	lower tol.	-0,3		-0,3		-0,4		-0,4		-0,6		-0,5		-0,5	
d_s	upper tol.	2,65		2,95		3,3		3,65		4,4		5,8		7,1	
	lower tol.	2,45		2,75		3,1		3,45		4,2		5,6		6,9	
P ±10%		2,6		3,0		3,4		3,8		4,5		6,0		7,5	
k	upper tol.	2,1		2,5		2,7		3,0		3,6		4,7		6,0	
	lower tol.	1,8		2,1		2,3		2,6		3,1		4,0		5,2	
Recess		HD/T-15		HD/T-15		HD/T-25		HD/T-25		HD/T-25		HD/T-40		HD/T-40	
t	upper tol.	1,47		1,65		1,8		2,15		2,6		3,15		3,85	
	lower tol.	1,27		1,4		1,5		1,85		2,3		2,85		3,4	
A		3,35		3,35		4,53		4,53		4,53		6,8		6,8	
L		Lv	Lt	Lv	Lt	Lv	Lt	Lv	Lt	Lv	Lt	Lv	Lt	Lv	Lt
20		16													
25		21		20		20		20							
30		26	18*	25	20	24	20	24		24					
35		31	21*	30	20	29	20	29	20	28					
40		36	24*	35	25	34	25	34	23	33					
45		41	27*	40	25	39	25	39	28	38					
50		46	31*	45	30	44	30	44	28	43	30				
55				50	35	49	30	49	38	48	30				
60				54	35	54	35	54	38	53	35				
65					40	60	35	59	38	58	35				
70					40	64	40	64	42		40				
75						69	40	69	42		40				
80						74	50	74	47		45		60		60
90								84	55		55		60		60
100								94	60		60		60		80
110									60		60		70		80
120									60		60		70		80
130											60		70		80
140											60		70		80
150											60		70		80
160											60		70		100
180											60		100		100
190											60		100		100
200											60		100		100
220 - 380		with 20mm grading									60		100		100
380 - 500		with 20mm grading									60		100		100

L_v=L-d

Lv and „*“without shank rips

Other screw lengths with $L_{min} \leq L \leq L_{max}$ and other thread lengths lg $\geq$ 4*d up to max. standard thread length, are allowed

HECO-FIX-plus, HECO-TOPIX, HECO-TOPIX-T and HECO-TOPIX-CC screws

HECO-TOPIX Countersunk Head
T-Drive
Carbon steel

Annex 6.4

electronic copy of the eta by dibt: eta-11/0284

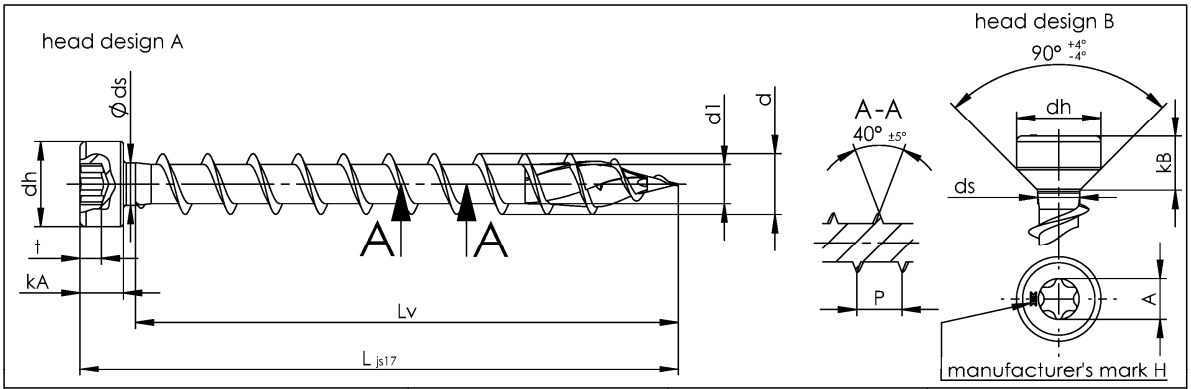

nom. diameter		Ø6,0	Ø8,0	Ø10,0
d	upper tol. lower Tol.	6,2 +0,3 -0,3	8 +0,4 -0,1	10 +0,45 -0,10
d1	upper tol. lower Tol.	3,95 3,45	5,45 5,05	6,65 6,2
dh	upper tol. lower Tol.	9 +0,2 -0,2	12 +0,2 -0,2	14 +0,2 -0,2
ds	upper tol. lower Tol.	4,3 +0,1 -0,1	5,7 +0,1 -0,1	7,0 +0,1 -0,1
P ± 10%		4,5	6,0	7,5
kA / kB	upper tol. lower Tol.	4 +0,2 -0,2 / 5,2 +0,2 -0,2	5,2 +0,2 -0,2 / 6,8 +0,2 -0,2	7,2 +0,2 -0,2 /8,95 +0,2 -0,2
recess		HD/T30	HD/T40	HD/T40
t	upper tol. lower Tol.	2,8 +0,0 -0,3	3,45 +0,15 -0,15	3,56 +0,1 -0,2
A		4,53	6,8	6,8
L		**Lv**	**Lv**	**Lv**
35		L_v = L-d±1		
40			L_v = L-d-±2	
45				
50				L_v = L-d-±2
55				
60				
65				
70				
75				
80				
90				
100				
110				
120				
130				
140				
150				
160				
180				
190				
200				
220-380	in 20mm grading			

Other screw lengths with $L_{min} \leq L \leq L_{max}$ and other threadlengths lg ≥ 4*d up to max. standard thread length, are allowed.

HECO-FIX-plus, HECO-TOPIX, HECO-TOPIX-T and HECO-TOPIX-CC screws

HECO-TOPIX Cylinder Head
HD-/T-Drive
Carbon steel

Annex 6.5

electronic copy of the eta by dibt: eta-11/0284

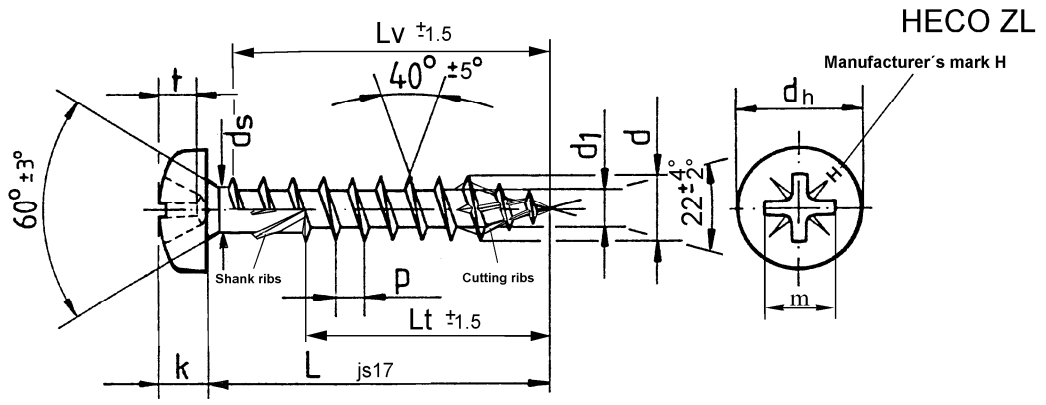

Nom. diameter		Ø 3,5		Ø 4,0		Ø 4,5		Ø 5,0		Ø 6,0		Ø 8,0		Ø 10,0	
d	upper tol.	3,6 +0,2		4,1 +0,2		4,6 +0,2		5,2 +0,2		6,2 +0,3		8,0 +0,4		10 +0,45	
	lower tol.	-0,2		-0,2		-0,2		-0,3		-0,3		-0,1		-0,1	
d_1	upper tol.	2,4		2,65		2,95		3,4		3,95		5,45		6,65	
	lower tol.	2,05		2,3		2,55		3,0		3,55		5,05		6,2	
d_h	upper tol.	6,8 +0,3		7,8 +0,3		8,7 +0,4		9,4 +0,4		11,8 +0		14,8 +0		18,5 +0	
	lower tol.	-0,3		-0,3		-0,4		-0,4		-0,6		-0,5		-0,5	
d_s	upper tol.	2,65		2,95		3,3		3,65		4,4		5,8		7,1	
	lower tol.	2,45		2,75		3,1		3,45		4,2		5,6		6,9	
P ±10%		2,6		3,0		3,4		3,8		4,5		6,0		7,5	
k	upper tol.	2,6		2,9		3,05		3,4		4,0		5,4		6,5	
	lower tol.	2,35		2,55		2,75		3,1		3,7		5,0		6,1	
Recess Z		2		2		2		2		3		4		4	
t	upper tol.	1,85		2,46		2,72		3,15		3,48		4,17		5,69	
	lower tol.	1,6		2,2		2,26		2,59		3,02		3,71		5,23	
m		3,8		4,4		4,6		5,1		6,7		8,5		9,9	
L		Lv	Lt	Lv	Lt	Lv	Lt	Lv	Lt	Lv	Lt	Lv	Lt	Lv	Lt
20		16													
25		21		20		20		20							
30		26	18*	25	20	24	20	24		24					
35		31	21*	30	20	29	20	29	20	28					
40		36	24*	35	25	34	25	34	23	33					
45		41	27*	40	25	39	25	39	28	38					
50		46	31*	45	30	44	30	44	28	43	30				
55				50	35	49	30	49	38	48	30				
60				54	35	54	35	54	38	53	35				
65					40	60	35	60	38	58	35				
70					40	60	40	60	42	60	40				
75							40	60	42	60	40				
80							50	60	47	60	45		60		60
90									55		55		60		60
100									60		60		60		80
110									60		60		70		80
120									60		60		70		80
130											60		70		80
140											60		70		80
150											60		70		80
160											60		70		100
180											60		100		100
190											60		100		100
200											60		100		100
220 - 300		in 20mm grading									60		100		100
320 - 400		in 20mm grading									60		100		100

Other srew lenghts with $L_{min} \leq L \leq L_{max}$ and other thread lengths lg $\geq$ 4*d up to max. standard thread length, are allowed

HECO-FIX-plus, HECO-TOPIX, HECO-TOPIX-T and HECO-TOPIX-CC screws

HECO-FIX-plus Pan Head
Pozi-Drive
Carbon steel

Annex 6.6

electronic copy of the eta by dibt: eta-11/0284

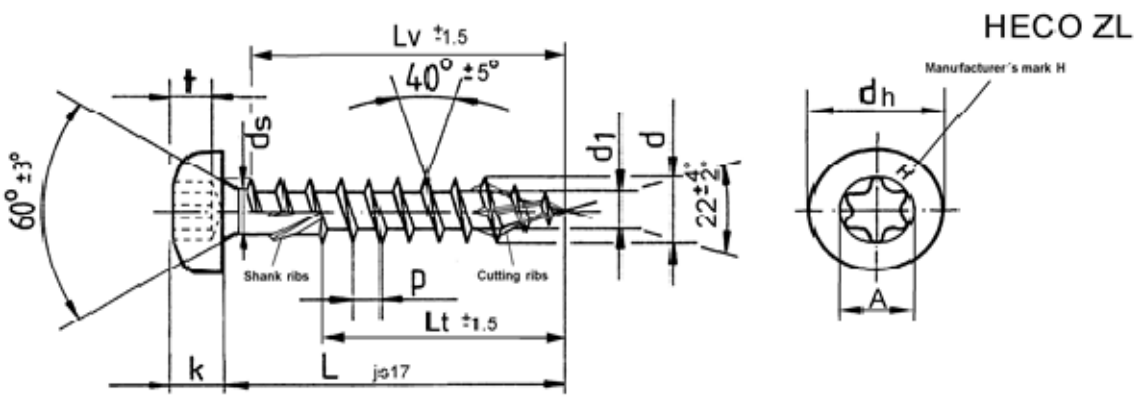

Nom. diameter		Ø 3,5		Ø 4,0		Ø 4,5		Ø 5,0		Ø 6,0		Ø 8,0		Ø 10,0	
d	upper tol. lower tol.	3,6 +0,2 -0,2		4,1 +0,2 -0,2		4,6 +0,2 -0,2		5,2 +0,2 -0,3		6,2 +0,3 -0,3		8,0 +0,4 -0,1		10 +0,45 -0,1	
d_1	upper tol. lower tol.	2,4 2,05		2,65 2,3		2,95 2,55		3,4 3,0		3,95 3,55		5,45 5,05		6,65 6,2	
d_h	upper tol. lower tol.	6,8 +0,3 -0,3		7,8 +0,3 -0,3		8,7 +0,4 -0,4		9,4 +0,4 -0,4		11,8 +0 -0,6		14,8 +0 -0,5		18,5 +0 -0,5	
d_s	upper tol. lower tol.	2,65 2,45		2,95 2,75		3,3 3,1		3,65 3,45		4,4 4,2		5,8 5,6		7,1 6,9	
P	±10%	2,6		3,0		3,4		3,8		4,5		6,0		7,5	
k		2,6 2,35		2,9 2,55		3,05 2,75		3,4 3,1		4,0 3,7		5,4 5,0		6,5 6,1	
Recess		HD/T-15		HD/T-15		HD/T-25		HD/T-25		HD/T-25		HD/T-40		HD/T-40	
t	upper tol. lower tol.	1,85 1,6		2,46 2,2		2,72 2,26		3,15 2,69		3,48 3,02		3,15 2,85		3,85 3,4	
A		3,35		3,35		4,53		4,53		4,53		6,8		6,8	
L		Lv	Lt	Lv	Lt	Lv	Lt	Lv	Lt	Lv	Lt	Lv	Lt	Lv	Lt
20		16													
25		21		20		20		20							
30		26	18*	25	20	24	20	24		24					
35		31	21*	30	20	29	20	29	20	28					
40		36	24*	35	25	34	25	34	23	33					
45		41	27*	40	25	39	25	39	28	38					
50		46	31*	45	30	44	30	44	28	43	30				
55				50	35	49	30	49	38	48	30				
60				54	35	54	35	54	38	53	35				
65					40	60	35	60	38	58	35				
70					40	60	40	60	42	60	40				
75							40	60	42	60	40				
80							50	60	47	60	45		60		60
90									55		55		60		60
100									60		60		60		80
110									60		60		70		80
120									60		60		70		80
130											60		70		80
140											60		70		80
150											60		70		80
160											60		70		100
180											60		100		100
190											60		100		100
200											60		100		100
220 - 300		with 20mm grading									60		100		100
320 - 400		with 20mm grading									60		100		100

Other screw lengths with $L_{min} \leq L \leq L_{max}$ and other thread lengths lg ≥ 4*d up to max. standard thread length, are allowed

HECO-FIX-plus, HECO-TOPIX, HECO-TOPIX-T and HECO-TOPIX-CC screws

HECO-TOPIX Pan Head
T-Drive
Carbon steel

Annex 6.7

electronic copy of the eta by dibt: eta-11/0284

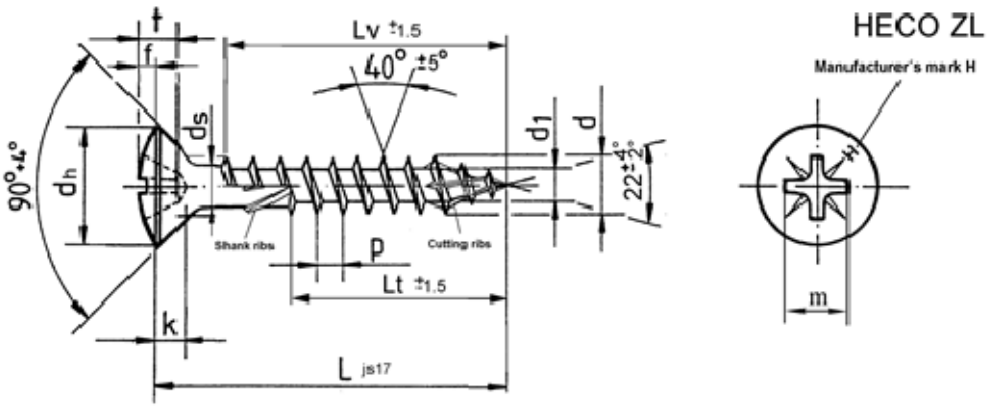

Nom. diameter		Ø 3,5		Ø 4,0		Ø 4,5		Ø 5,0		Ø 6,0		Ø 8,0		Ø 10,0	
d	upper tol.	3,6 +0,25		4,1 +0,25		4,6 +0,25		5,2 +0,2		6,2 +0,3		8,0 +0,4		10 +0,45	
	lower tol.	-0,2		-0,2		-0,2		-0,3		-0,3		-0,1		-0,1	
d_1	upper tol.	2,55		2,95		3,25		3,7		4,4		5,45		6,65	
	lower tol.	2,2		2,6		2,85		3,35		4,05		5,05		6,2	
d_h	upper tol.	6,8 +0,3		7,8 +0,3		8,7 +0,4		9,4 +0,4		11,8 +0		14,8 +0		18,5 +0	
	lower tol.	-0,3		-0,3		-0,4		-0,4		-0,6		-0,5		-0,5	
d_s	upper tol.	2,75		3,15		3,45		3,9		4,7		5,8		7,1	
	lower tol.	2,55		2,95		3,25		3,7		4,5		5,6		6,9	
P ±10%		2,6		3,0		3,4		3,8		4,5		6,0		7,5	
k	upper tol.	2,1		2,5		2,7		3,0		3,6		4,7		6,0	
	lower tol.	1,8		2,1		2,3		2,6		3,1		4,0		5,2	
f	upper tol.	1,2		1,3		1,55		1,55		1,95		2,2		3,3	
	lower tol.	0,9		1,0		1,15		1,15		1,55		1,7		2,8	
Recess Z		2		2		2		2		3		4		4	
t	upper tol.	2,11		2,72		3,15		3,35		3,86		4,52		6,17	
	lower tol.	1,65		2,26		2,69		2,89		3,4		4,06		5,71	
m		4,0		4,6		5,1		5,3		7,1		8,8		10,4	
L		Lv	Lt	Lv	Lt	Lv	Lt	Lv	Lt	Lv	Lt	Lv	Lt	Lv	Lt
20		16													
25		21		20		20		20							
30		26	18*	25	20	24	20	24		24					
35		31	21*	30	20	29	20	29	20	28					
40		36	24*	35	25	34	25	34	23	33					
45		41	27*	40	25	39	25	39	28	38					
50		46	31*	45	30	44	30	44	28	43	30				
55				50	35	49	30	49	38	48	30				
60				54	35	54	35	54	38	53	35				
65					40	60	35	60	38	58	35				
70					40	60	40	60	42	60	40				
75							40	60	42	60	40				
80							50	60	47	60	45		60		60
90									55		55		60		60
100									60		60		60		80
110									60		60		70		80
120									60		60		70		80
130											60		70		80
140		Lv and „*"without shank ribs									60		70		80
150											60		70		80
160											60		70		100
180											60		100		100
190											60		100		100
200											60		100		100
220 - 300		with 20mm grading									60		100		100
320 - 400		with 20mm grading									60		100		100
420 - 500		with 20mm grading									60		100		100

Other screw lengths with $L_{min} \leq L \leq L_{max}$ and other thread lengths lg $\geq$ 4*d up to max. standard thread length, are allowed

HECO-FIX-plus, HECO-TOPIX, HECO-TOPIX-T and HECO-TOPIX-CC screws

HECO-TOPIX Raised Countersunk
Pozi-Drive
Carbon steel

Annex 6.8

electronic copy of the eta by dibt: eta-11/0284

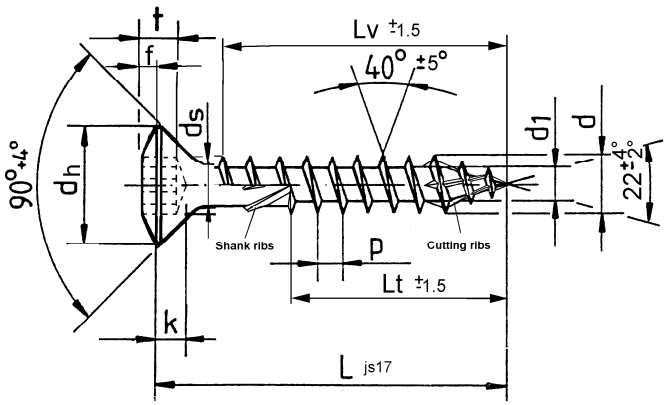

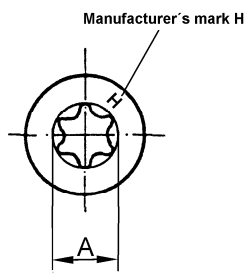

Nom. diameter		Ø 3,5		Ø 4,0		Ø 4,5		Ø 5,0		Ø 6,0		Ø 8,0		Ø 10,0	
d	upper tol.	3,6 +0,2		4,1 +0,2		4,6 +0,2		5,2 +0,2		6,2 +0,3		8,0 +0,4		10 +0,45	
	lower tol.	-0,2		-0,2		-0,2		-0,3		-0,3		-0,1		-0,1	
d_1	upper tol.	2,4		2,65		2,95		3,4		3,95		5,45		6,65	
	lower tol.	2,05		2,3		2,55		3,0		3,55		5,05		6,2	
d_h	upper tol.	6,8 +0,3		7,8 +0,3		8,7 +0,4		9,4 +0,4		11,8 +0		14,8 +0		18,5 +0	
	lower tol.	-0,3		-0,3		-0,4		-0,4		-0,6		-0,5		-0,5	
d_s	upper tol.	2,65		2,95		3,3		3,65		4,4		5,8		7,1	
	lower tol.	2,45		2,75		3,1		3,45		4,2		5,6		6,9	
P ±10%		2,6		3,0		3,4		3,8		4,5		6,0		7,5	
k	upper tol.	2,1		2,5		2,7		3,0		3,6		4,7		6,0	
	lower tol.	1,8		2,1		2,3		2,6		3,1		4,0		5,2	
f	upper tol.	1,05		1,3		1,35		1,35		1,95		2,2		3,3	
	lower tol.	0,75		1,0		0,95		0,95		1,55		1,7		2,8	
Recess		HD/T-15		HD/T-15		HD/T-25		HD/T-25		HD/T-25		HD/T-40		HD/T-40	
t	upper tol.	1,47		1,65		1,8		2,15		2,6		3,15		3,85	
	lower tol.	1,27		1,4		1,5		1,85		2,3		2,85		3,4	
A		3,35		3,35		4,53		4,53		4,53		6,8		6,8	
L		Lv	Lt	Lv	Lt	Lv	Lt	Lv	Lt	Lv	Lt	Lv	Lt	Lv	Lt
20		16													
25		21		20		20		20							
30		26	18*	25	20	24	20	24		24					
35		31	21*	30	20	29	20	29	20	28					
40		36	24*	35	25	34	25	34	23	33					
45		41	27*	40	25	39	25	39	28	38					
50		46	31*	45	30	44	30	44	28	43	30				
55				50	35	49	30	49	38	48	30				
60				54	35	54	35	54	38	53	35				
65					40	60	35	60	38	58	35				
70					40	60	40	60	42	60	40				
75							40	60	42	60	40				
80							50	60	47	60	45		60		60
90									55		55		60		60
100									60		60		60		80
110									60		60		70		80
120									60		60		70		80
130											60		70		80
140		Lv and „*“without shank ribs									60		70		80
150											60		70		80
160											60		70		100
180											60		100		100
190											60		100		100
200											60		100		100
220 - 300		with 20mm grading									60		100		100
320 - 400		with 20mm grading									60		100		100
420 - 500		with 20mm grading									60		100		100

Other screw lengths with $L_{min} \leq L \leq L_{max}$ and other thread lengths lg ≥ 4*d up to max. standard thread length, are allowed

HECO-FIX-plus, HECO-TOPIX, HECO-TOPIX-T and HECO-TOPIX-CC screws

HECO-TOPIX-plus Raised Countersunk
T-Drive
Carbon steel

Annex 6.9

electronic copy of the eta by dibt: eta-11/0284

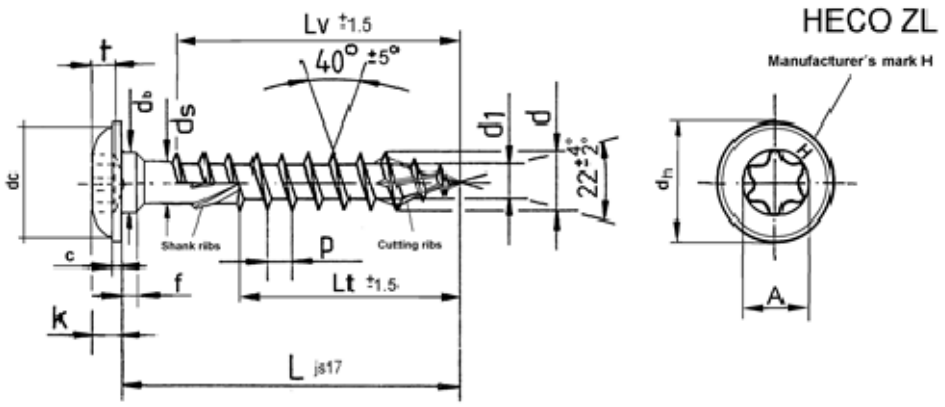

Nom. diameter							∅ 6,0		∅ 8,0		∅ 10,0	
d	upper tol. lower tol.						6,2 +0,3 -0,3		8 +0,4 -0,1		10 +0,45 -0,1	
*d*1	upper tol. lower tol.						3,95 3,55		5,45 5,05		6,65 6,2	
*d*h	upper tol. lower tol.						14 +1 -1		17,5 +1 -1		22,5 +1 -1	
*d*b	upper tol. lower tol.						6,2 +0,3 -0,3		8 +0,5 -0,5		10 +0,5 -0,5	
*d*s	upper tol. lower tol.						4,4 4,2		5,8 5,6		7,1 6,9	
dc							ca. 12		ca. 16		ca. 20	
P ±10%							4,5		6,0		7,5	
k	upper tol. lower tol.						2,9 2,2		4,0 3,3		4,2 3,5	
f	upper tol. lower tol.						1,8 1,1		2,6 2,0		2,6 2,0	
c	upper tol. lower tol.						1,7 1,2		2,0 1,5		2,3 1,7	
Recess							HD/T-25		HD/T-40		HD/T-40	
t	upper tol. lower tol.						2,7 2,4		3,5 2,6		4,0 3,0	
A							4,5		6,8		6,8	
L		Lv	Lt	Lv	Lt	Lv	Lt	Lv	Lt	Lv	Lt	Lv	Lt
40								33					
50								43		40			
60								53		50		50	
70								60		60		60	
80								70	60	70	60	70	60
90								83	70	80	60	80	60
100								93	70	90	60	90	60
120								113	70	100	70	100	80
140								L_V=L-7	70	L_V=L-10	70	LV=L-10	80
160									70		100		100
180				Lv and „*"without shank ribs					70		100		100
200									70		100		100
220-380		with 20mm grading							70		100		100
380-500		with 20mm grading							70		100		100

Other screw lengths with $L_{min} \leq L \leq L_{max}$ and other thread lengths lg ≥ 4*d up to max. standard thread length, are allowed

HECO-FIX-plus, HECO-TOPIX, HECO-TOPIX-T and HECO-TOPIX-CC screws

HECO-TOPIX Flange Head
T-Drive
Carbon steel

Annex 6.10

electronic copy of the eta by dibt: eta-11/0284

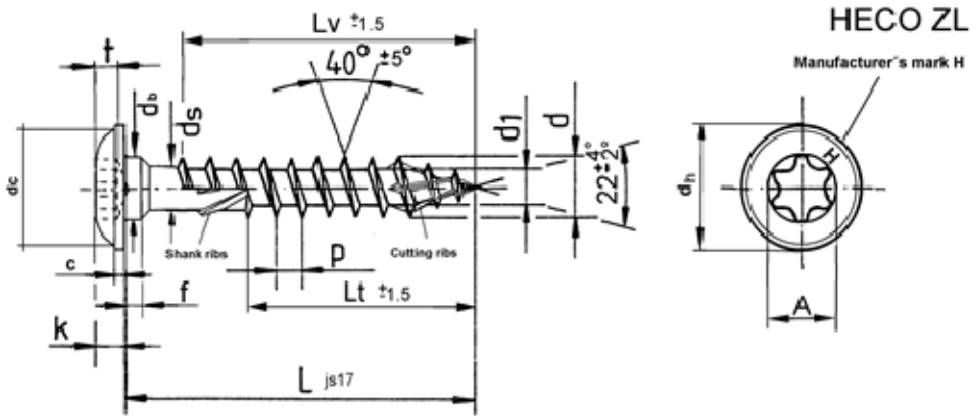

Nom. diameter										∅ 8,0		∅ 10,0	
d	upper tol. lower tol.									8 +0,4 -0,1		10 +0,45 -0,1	
d_1	upper tol. lower tol.									5,45 5,05		6,65 6,2	
d_h	upper tol. lower tol.									23 +1 -1		28 +1 -1	
d_s	upper tol. lower tol.									5,8 5,6		7,1 6,9	
d_c										ca. 13		ca. 16	
P ±10%										6,0		7,5	
k	upper tol. lower tol.									4,0 3,3		4,2 3,5	
f	upper tol. lower tol.									2,6 2,0		2,6 2,0	
c	upper tol. lower tol.									2,0 1,5		2,3 1,7	
Recess										HD/-T40		HD/-T40	
t	upper tol. lower tol.									3,5 2,6		4,0 3,0	
A										6,8		6,8	
L		Lv	Lt	Lv	Lt	Lv	Lt	Lv	Lt	Lv	Lt	Lv	Lt
40													
50										40			
60										50		50	
70										60		60	
80										70	60	70	60
90										80	60	80	60
100										90	60	90	60
120										100	70	100	80
140											70		80
160											100		100
180		Lv and „*“without shank ribs								L_V=L-10	100	L_V=L-10	100
200											100		100
220-380		with 20mm grading									100		100
380-500		with 20mm grading									100		100

Other screw lengths with $L_{min} \leq L \leq L_{max}$ and other thread lengths lg $\geq$ 4*d up to max. standard thread length, are allowed

HECO-FIX-plus, HECO-TOPIX, HECO-TOPIX-T and HECO-TOPIX-CC screws

HECO-TOPIX Flange Head, alternative
T-Drive
Carbon steel

Annex 6.11

electronic copy of the eta by dibt: eta-11/0284

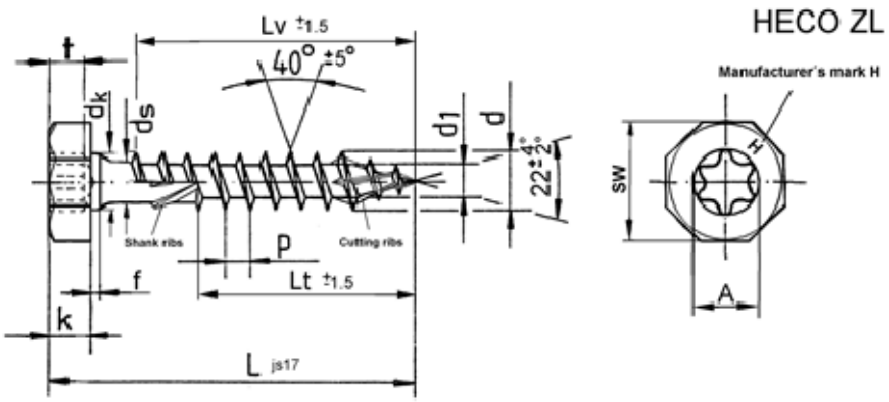

Nom. diameter						Ø 6,0		Ø 8,0		Ø 10,0	
d	upper tol. lower tol.					6,2 +0,3 -0,3		8 +0,4 -0,1		10 +0,45 -0,1	
*d*1	upper tol. lower tol.					3,95 3,55		5,45 5,05		6,65 6,2	
SW	upper tol. lower tol.					10 +0 -0,3		13 +0 -0,3		15 +0 -0,33	
*d*k	upper tol. lower tol.					6,2 +0,3 -0,3		8 +0,5 -0,5		10 +0 -0,2	
*d*s	upper tol. lower tol.					4,4 4,2		5,8 5,6		7,1 6,9	
P ±10%						4,5		6,0		7,5	
k	upper tol. lower tol.					4,8 4,4		5,2 4,8		5,3 4,7	
f	upper tol. lower tol.					2,3 1,7		2,3 1,7		2,3 1,7	
Recess						HD/T-25		HD/T-40		HD/T-40	
t	upper tol. lower tol.					2,7 2,4		3,5 2,6		4,0 3,0	
A						4,5		6,8		6,8	
L	Lv	Lt	Lv	Lt	Lv	Lt	Lv	Lt	Lv	Lt	Lv	Lt	Lv	Lt
40									33					
50									43		40		40	
60									53		50		50	
70									60		60		60	
80									70	60	70	60	70	60
90									83	70	80	60	80	60
100									93	70	80	60	90	60
120									113	70	100	70	100	80
140									$L_V = L-7$	70	$L_V = L-10$	70	$L_V = L-10$	80
160										70		100		100
180										70		100		100
200										70		100		100
220-380										70		100		100
380-500										70		100		100

Other screw lengths with $L_{min} \leq L \leq L_{max}$ and other thread lengths lg $\geq$ 4*d up to max. standard thread length, are allowed

HECO-FIX-plus, HECO-TOPIX, HECO-TOPIX-T and HECO-TOPIX-CC screws

HECO-TOPIX Hexagon Head
T-Drive
Carbon steel

Annex 6.12

electronic copy of the eta by dibt: eta-11/0284

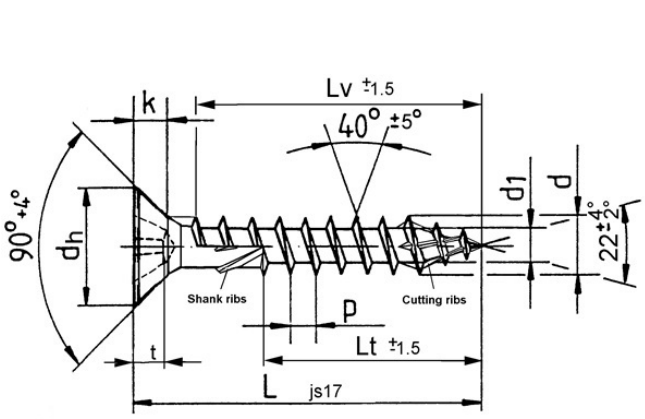

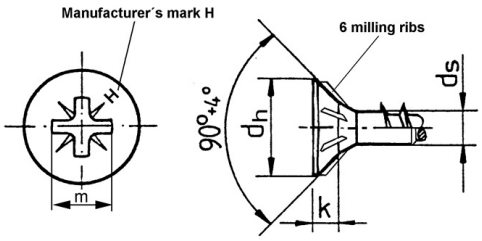

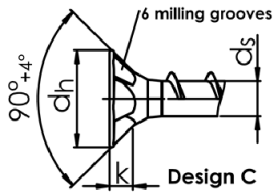

Nom. diameter		Ø 3,5		Ø 4,0		Ø 4,5		Ø 5,0		Ø 6,0		Ø 8,0		Ø 10,0	
d	upper tol.	3,6 +0,2		4,1 +0,2		4,6 +0,2		5,2 +0,2		6,2 +0,3		8,0 +0,4		10 +0,45	
	lower tol.	-0,2		-0,2		-0,2		-0,3		-0,3		-0,1		-0,1	
d_1	upper tol.	2,55		2,95		3,25		3,7		4,4		5,45		6,65	
	lower tol.	2,2		2,6		2,85		3,35		4,05		5,05		6,2	
d_h	upper tol.	6,8 +0,3		7,8 +0,3		8,7 +0,4		9,4 +0,4		11,8 +0		14,8 +0		18,5 +0	
	lower tol.	-0,3		-0,3		-0,4		-0,4		-0,6		-0,5		-0,5	
d_s	upper tol.	2,75		3,15		3,45		3,9		4,7		5,8		7,1	
	lower tol.	2,55		2,95		3,25		3,7		4,5		5,6		6,9	
P	±10%	2,6		3,0		3,4		3,8		4,5		6,0		7,5	
k	upper tol.	2,1		2,5		2,7		3,0		3,6		4,7		6,0	
	lower tol.	1,8		2,1		2,3		2,6		3,1		4,0		5,2	
Recess Z		2		2		2		2		3		4		4	
t	upper tol.	2,06		2,51		3,1		3,45		3,45		4,32		5,65	
	lower tol.	1,7		2,05		2,64		3,0		3,0		3,86		5,2	
m		4,0		4,4		4,9		5,3		6,6		8,5		9,8	
L		Lv	Lt	Lv	Lt	Lv	Lt	Lv	Lt	Lv	Lt	Lv	Lt	Lv	Lt
20		16													
25		21		20		20		20							
30		26	18*	25	20	24	20	24		24					
35		31	21*	30	20	29	20	29	20	28					
40		36	24*	35	25	34	25	34	23	33					
45		41	27*	40	25	39	25	39	28	38					
50		46	31*	45	30	44	30	44	28	43	30				
55				50	35	49	30	49	38	48	30				
60				54	35	54	35	54	38	53	35				
65					40	60	35	60	38	58	35				
70					40	60	40	60	42		40				
75							40	60	42		40				
80							50	60	47		45		60		60
90									55		55		60		60
100									60		60	L_V=L-d	60		80
110									60	L_V=L-d	60		70	L_V=L-d	80
120									60		60		70		80
130											60		70		80
140		Lv and „*“without shank ribs									60		70		80
150											60		70		80
160											60		70		100
180											60		100		100
190											60		100		100
200											60		100		100
220 - 380		with 20mm grading									60		100		100
380 - 500		with 20mm grading									60		100		100

Other screw lengths with $L_{min} \leq L \leq L_{max}$ and other thread lengths lg $\geq$ 4*d up to max. standard thread length, are allowed

HECO-FIX-plus, HECO-TOPIX, HECO-TOPIX-T and HECO-TOPIX-CC screws

HECO-TOPIX Countersunk Head
Pozi-Drive
Stainless steel

Annex 6.13

electronic copy of the eta by dibt: eta-11/0284

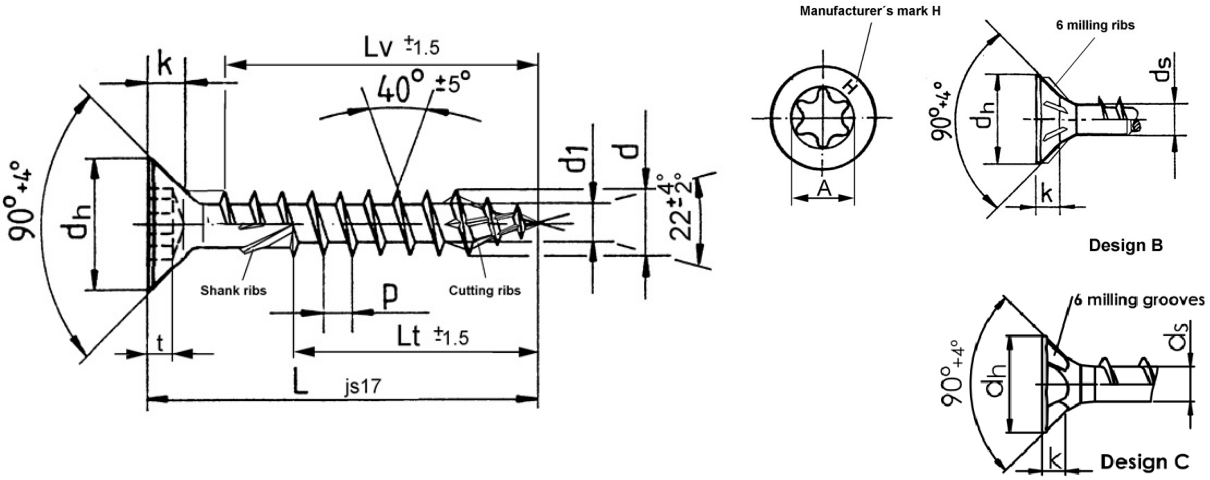

Nom. diameter		Ø 3,5		Ø 4,0		Ø 4,5		Ø 5,0		Ø 6,0		Ø 8,0		Ø 10,0	
d	upper tol.	3,6	+0,2	4,1	+0,2	4,6	+0,2	5,2	+0,2	6,2	+0,3	8,0	+0,4	10	+0,45
	lower tol.		-0,2		-0,2		-0,2		-0,3		-0,3		-0,1		-0,1
d_1	upper tol.	2,55		2,95		3,25		3,7		4,4		5,45		6,65	
	lower tol.	2,2		2,6		2,85		3,35		4,05		5,05		6,2	
d_h	upper tol.	6,8	+0,3	7,8	+0,3	8,7	+0,4	9,4	+0,4	11,8	+0	14,8	+0	18,5	+0
	lower tol.		-0,3		-0,3		-0,4		-0,4		-0,6		-0,5		-0,5
d_s	upper tol.	2,75		3,15		3,45		3,9		4,7		5,8		7,1	
	lower tol.	2,55		2,95		3,25		3,7		4,5		5,6		6,9	
P	±10%	2,6		3,0		3,4		3,8		4,5		6,0		7,5	
k	upper tol.	2,1		2,5		2,7		3,0		3,6		4,7		6,0	
	lower tol.	1,8		2,1		2,3		2,6		3,1		4,0		5,2	
Recess		HD/T-15		HD/T-15		HD/T-25		HD/T-25		HD/T-25		HD/T-40		HD/T-40	
t	upper tol.	1,47		1,65		1,8		2,15		2,6		3,15		3,85	
	lower tol.	1,27		1,4		1,5		1,85		2,3		2,85		3,4	
A		3,35		3,35		4,53		4,53		4,53		6,8		6,8	
L		Lv	Lt	Lv	Lt	Lv	Lt	Lv	Lt	Lv	Lt	Lv	Lt	Lv	Lt
20		16													
25		21		20		20		20							
30		26	18*	25	20	24	20	24		24					
35		31	21*	30	20	29	20	29	20	28					
40		36	24*	35	25	34	25	34	23	33					
45		41	27*	40	25	39	25	39	28	38					
50		46	31*	45	30	44	30	44	28	43	30				
55				50	35	49	30	49	38	48	30				
60				54	35	54	35	54	38	53	35				
65					40	60	35	60	38	58	35				
70					40	60	40	60	42		40				
75							40	60	42		40				
80							50	60	47		45		60		60
90									55		55		60		60
100									60		60	L_V=L-d	60		80
110									60	L_V=L-d	60		70	L_V=L-d	80
120									60		60		70		80
130											60		70		80
140		Lv and „*“without shank ribs									60		70		80
150											60		70		80
160											60		70		100
180											60		100		100
190											60		100		100
200											60		100		100
220 - 380		with 20mm grading									60		100		100
380 - 500		with 20mm grading									60		100		100

Other screw lengths with $L_{min} \leq L \leq L_{max}$ and other thread lengths lg $\geq$ 4*d up to max. standard thread length, are allowed

HECO-FIX-plus, HECO-TOPIX, HECO-TOPIX-T and HECO-TOPIX-CC screws

HECO-TOPIX Countersunk Head
T-Drive
Stainless steel

Annex 6.14

electronic copy of the eta by dibt: eta-11/0284

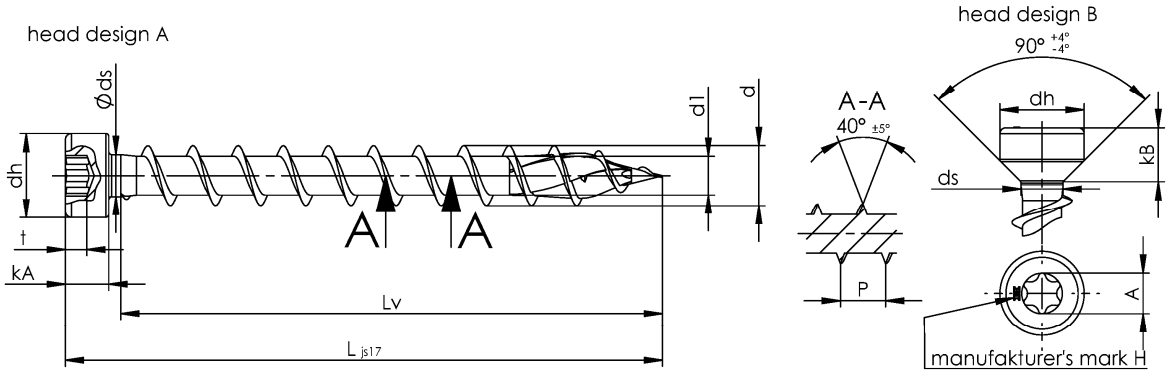

nom. diameter		Ø6,0	Ø8,0	Ø10,0
d	upper tol. lower Tol.	6,2 +0,3 -0,3	8 +0,4 -0,1	10 +0,45 -0,10
d1	upper tol. lower Tol.	4,40 4,05	5,45 5,05	6,65 6,2
dh	upper tol. lower Tol.	9 +0,2 -0,2	12 +0,2 -0,2	14 +0,2 -0,2
ds	upper tol. lower Tol.	4,6 +0,1 -0,1	5,7 +0,1 -0,1	7,0 +0,1 -0,1
P ± 10%		4,5	6,0	7,5
kA / kB	upper tol. lower Tol.	4 +0,2 -0,2 / 5,2 +0,2 -0,2	5,2 +0,2 -0,2 / 6,8 +0,2 -0,2	7,2 +0,2 -0,2 / 8,95 +0,2 -0,2
recess		HD/T30	HD/T40	HD/T40
t	upper tol. lower Tol.	2,8 +0,0 -0,3	3,45 +0,15 -0,15	3,56 +0,1 -0,2
A		4,53	6,8	6,8
L		**Lv**	**Lv**	**Lv**
35		L_v = L-d±1		
40			L_v = L-d±2	
45				
50				L_v = L-d±2
55				
60				
65				
70				
75				
80				
90				
100				
110				
120				
130				
140				
150				
160				
180				
190				
200				
220-380	in 20mm grading			

Other screw lengths with $L_{min} \leq L \leq L_{max}$ and other threadlengths lg ≥ 4*d up to max. standard thread length, are allowed.

HECO-FIX-plus, HECO-TOPIX, HECO-TOPIX-T and HECO-TOPIX-CC screws

HECO-TOPIX Cylinder Head
HD-/T-Drive
Stainless steel

Annex 6.15

electronic copy of the eta by dibt: eta-11/0284

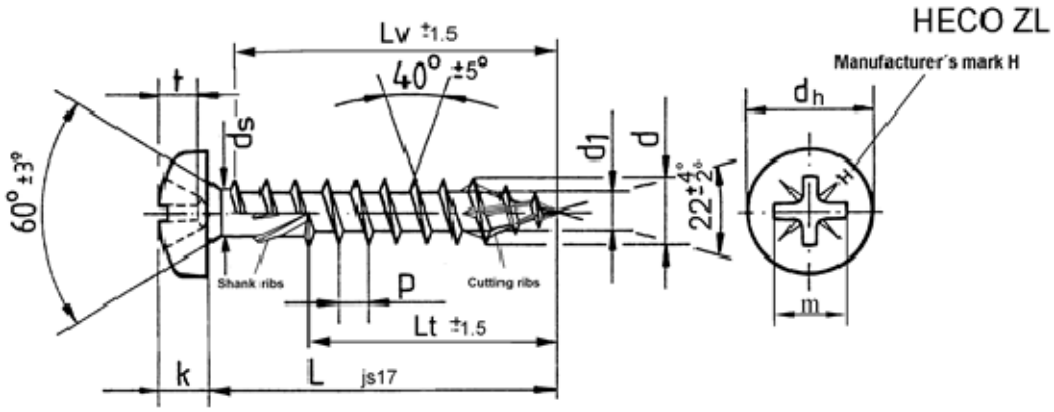

Nom. diameter		Ø 3,5		Ø 4,0		Ø 4,5		Ø 5,0		Ø 6,0		Ø 8,0		Ø 10,0	
d	upper tol. lower tol.	3,6 +0,2 -0,2		4,1 +0,2 -0,2		4,6 +0,2 -0,2		5,2 +0,2 -0,3		6,2 +0,3 -0,3		8,0 +0,4 -0,1		10 +0,45 -0,1	
d_1	upper tol. lower tol.	2,55 2,2		2,95 2,6		3,25 2,85		3,7 3,35		4,4 4,05		5,45 5,05		6,65 6,2	
d_h	upper tol. lower tol.	6,8 +0,3 -0,3		7,8 +0,3 -0,3		8,7 +0,4 -0,4		9,4 +0,4 -0,4		11,8 +0 -0,6		14,8 +0 -0,5		18,5 +0 -0,5	
d_s	upper tol. lower tol.	2,75 2,55		3,15 2,95		3,45 3,25		3,9 3,7		4,7 4,5		5,8 5,6		7,1 6,9	
P ±10%		2,6		3,0		3,4		3,8		4,5		6,0		7,5	
k	upper tol. lower tol.	2,6 2,35		2,9 2,55		3,05 2,75		3,4 3,1		4,0 3,7		5,4 5,0		6,5 6,1	
Recess Z		2		2		2		2		3		4		4	
t	upper tol. lower tol.	1,85 1,6		2,46 2,2		2,72 2,26		3,15 2,59		3,48 3,02		4,17 3,71		5,69 5,23	
m		3,8		4,4		4,6		5,1		6,7		8,5		9,9	
L		Lv	Lt	Lv	Lt	Lv	Lt	Lv	Lt	Lv	Lt	Lv	Lt	Lv	Lt
20		16													
25		21		20		20		20							
30		26	18*	25	20	24	20	24		24					
35		31	21*	30	20	29	20	29	20	28					
40		36	24*	35	25	34	25	34	23	33					
45		41	27*	40	25	39	25	39	28	38					
50		46	31*	45	30	44	30	44	28	43	30				
55				50	35	49	30	49	38	48	30				
60				54	35	54	35	54	38	53	35				
65					40	60	35	60	38	58	35				
70					40	60	40	60	42	60	40				
75							40	60	42	60	40				
80							50	60	47	60	45		60		60
90									55		55		60		60
100									60		60		60		80
110									60		60		70		80
120									60		60		70		80
130											60		70		80
140		Lv and „*“without shank ribs									60		70		80
150											60		70		80
160											60		70		100
180											60		100		100
190											60		100		100
200											60		100		100
220 - 300		with 20mm grading									60		100		100
320 - 400		with 20mm grading									60		100		100

Other screw lengths with $L_{min} \leq L \leq L_{max}$ and other thread lengths lg $\geq$ 4*d up to max. standard thread length, are allowed

HECO-FIX-plus, HECO-TOPIX, HECO-TOPIX-T and HECO-TOPIX-CC screws

HECO-TOPIX Pan Head
Pozi-Drive
Stainless steel

Annex 6.16

electronic copy of the eta by dibt: eta-11/0284

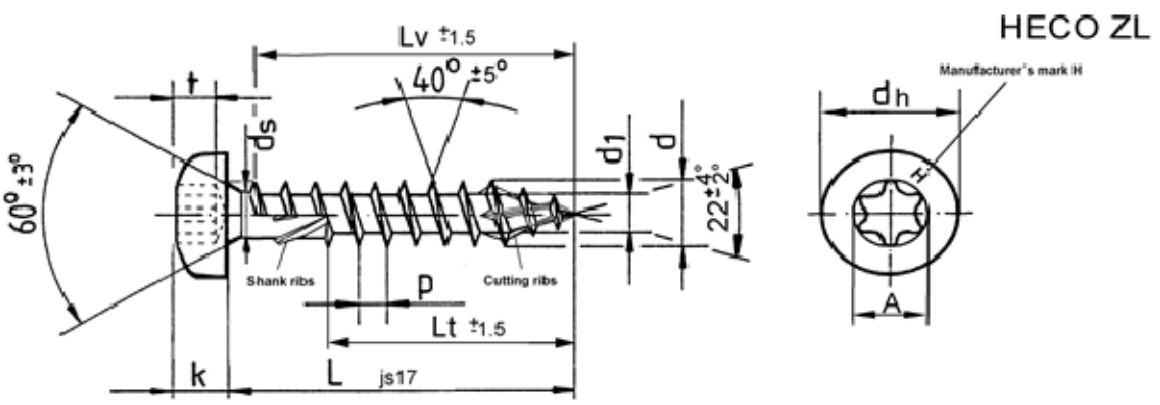

Nom. diameter		Ø 3,5		Ø 4,0		Ø 4,5		Ø 5,0		Ø 6,0		Ø 8,0		Ø 10,0	
d	upper tol.	3,6 +0,2		4,1 +0,2		4,6 +0,2		5,2 +0,2		6,2 +0,3		8,0 +0,4		10 +0,45	
	lower tol.	-0,2		-0,2		-0,2		-0,3		-0,3		-0,1		-0,1	
d_1	upper tol.	2,55		2,95		3,25		3,7		4,4		5,45		6,65	
	lower tol.	2,2		2,6		2,85		3,35		4,05		5,05		6,2	
d_h	upper tol.	6,8 +0,3		7,8 +0,3		8,7 +0,4		9,4 +0,4		11,8 +0		14,8 +0		18,5 +0	
	lower tol.	-0,3		-0,3		-0,4		-0,4		-0,6		-0,5		-0,5	
d_s	upper tol.	2,75		3,15		3,45		3,9		4,7		5,8		7,1	
	lower tol.	2,55		2,95		3,25		3,7		4,5		5,6		6,9	
P ±10%		2,6		3,0		3,4		3,8		4,5		6,0		7,5	
k	upper tol.	2,6		2,9		3,05		3,4		4,0		5,4		6,5	
	lower tol.	2,35		2,55		2,75		3,1		3,7		5,0		6,1	
Recess		HD/T-15		HD/T-15		HD/T-25		HD/T-25		HD/T-25		HD/T-40		HD/T-40	
t	upper tol.	1,85		2,46		2,72		3,15		3,48		3,15		3,85	
	lower tol.	1,6		2,2		2,26		2,69		3,02		2,85		3,4	
A		3,35		3,35		4,53		4,53		4,53		6,8		6,8	
L		Lv	Lt	Lv	Lt	Lv	Lt	Lv	Lt	Lv	Lt	Lv	Lt	Lv	Lt
20		16													
25		21		20		20		20							
30		26	18*	25	20	24	20	24		24					
35		31	21*	30	20	29	20	29	20	28					
40		36	24*	35	25	34	25	34	23	33					
45		41	27*	40	25	39	25	39	28	38					
50		46	31*	45	30	44	30	44	28	43	30				
55				50	35	49	30	49	38	48	30				
60				54	35	54	35	54	38	53	35				
65					40	60	35	60	38	58	35				
70					40	60	40	60	42	60	40				
75							40	60	42	60	40				
80							50	60	47	60	45		60		60
90									55		55		60		60
100									60		60		60		80
110									60		60		70		80
120									60		60		70		80
130											60		70		80
140		Lv and „*“without shank ribs									60		70		80
150											60		70		80
160											60		70		100
180											60		100		100
190											60		100		100
200											60		100		100
220 - 300		with 20mm grading									60		100		100
320 - 400		with 20mm grading									60		100		100

Other screw lengths with $L_{min} \leq L \leq L_{max}$ and other thread lengths lg $\geq$ 4*d up to max. standard thread length, are allowed

HECO-FIX-plus, HECO-TOPIX, HECO-TOPIX-T and HECO-TOPIX-CC screws

HECO-TOPIX Pan Head
T-Drive
Stainless steel

Annex 6.17

electronic copy of the eta by dibt: eta-11/0284

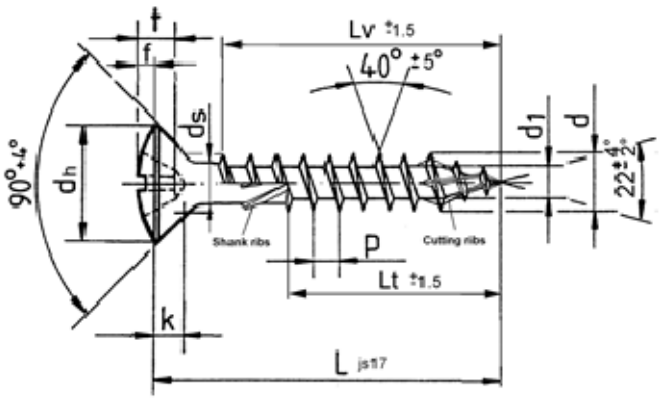

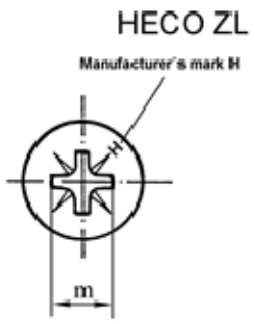

Nom. diameter		Ø 3,5	Ø 4,0	Ø 4,5	Ø 5,0	Ø 6,0	Ø 8,0	Ø 10,0
d	upper tol. lower tol.	3,6 +0,25 -0,2	4,1 +0,25 -0,2	4,6 +0,25 -0,2	5,2 +0,2 -0,3	6,2 +0,3 -0,3	8,0 +0,4 -0,1	10 +0,45 -0,1
d_1	upper tol. lower tol.	2,55 2,2	2,95 2,6	3,25 2,85	3,7 3,35	4,4 4,05	5,45 5,05	6,65 6,2
d_h	upper tol. lower tol.	6,8 +0,3 -0,3	7,8 +0,3 -0,3	8,7 +0,4 -0,4	9,4 +0,4 -0,4	11,8 +0 -0,6	14,8 +0 -0,5	18,5 +0 -0,5
d_s	upper tol. lower tol.	2,75 2,55	3,15 2,95	3,45 3,25	3,9 3,7	4,7 4,5	5,8 5,6	7,1 6,9
P ±10%		2,6	3,0	3,4	3,8	4,5	6,0	7,5
k	upper tol. lower tol.	2,1 1,8	2,5 2,1	2,7 2,3	3,0 2,6	3,6 3,1	4,7 4,0	6,0 5,2
f	upper tol. lower tol.	1,2 0,9	1,3 1,0	1,55 1,15	1,55 1,15	1,95 1,55	2,2 1,7	3,3 2,8
Recess Z		2	2	2	2	3	4	4
t	upper tol. lower tol.	2,11 1,65	2,72 2,26	3,15 2,69	3,35 2,89	3,86 3,4	4,52 4,06	6,17 5,71
m		4,0	4,6	5,1	5,3	7,1	8,8	10,4

L	Lv	Lt	Lv	Lt	Lv	Lt	Lv	Lt	Lv	Lt	Lv	Lt	Lv	Lt
20	16													
25	21		20		20		20							
30	26	18*	25	20	24	20	24		24					
35	31	21*	30	20	29	20	29	20	28					
40	36	24*	35	25	34	25	34	23	33					
45	41	27*	40	25	39	25	39	28	38					
50	46	31*	45	30	44	30	44	28	43	30				
55			50	35	49	30	49	38	48	30				
60			54	35	54	35	54	38	53	35				
65				40	60	35	60	38	58	35				
70				40	60	40	60	42	60	40				
75						40	60	42	60	40				
80						50	60	47	60	45		60		60
90								55		55		60		60
100								60		60		60		80
110								60		60		70		80
120								60		60		70		80
130										60		70		80
140		Lv and „*"without shank ribs								60		70		80
150										60		70		80
160										60		70		100
180										60		100		100
190										60		100		100
200										60		100		100
220 - 300	with 20mm grading									60		100		100
320 - 400	with 20mm grading									60		100		100
420 - 500	with 20mm grading									60		100		100

Other screw lengths with $L_{min} \leq L \leq L_{max}$ and other thread lengths lg $\geq$ 4*d up to max. standard thread length, are allowed

HECO-FIX-plus, HECO-TOPIX, HECO-TOPIX-T and HECO-TOPIX-CC screws

HECO-TOPIX Raised Countersunk Head
Pozi-Drive
Stainless steel

Annex 6.18

electronic copy of the eta by dibt: eta-11/0284

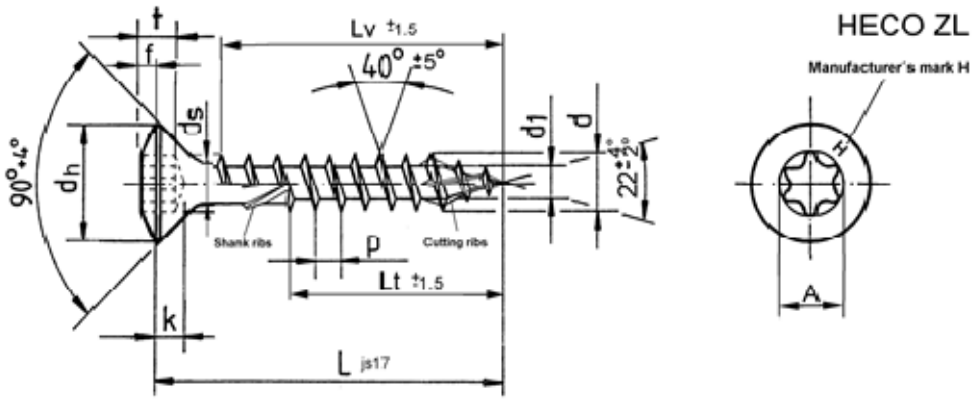

Nom. diameter		Ø 3,5		Ø 4,0		Ø 4,5		Ø 5,0		Ø 6,0		Ø 8,0		Ø 10,0	
d	upper tol.	3,6 +0,2		4,1 +0,2		4,6 +0,2		5,2 +0,2		6,2 +0,3		8,0 +0,4		10 +0,45	
	lower tol.	-0,2		-0,2		-0,2		-0,3		-0,3		-0,1		-0,1	
d_1	upper tol.	2,55		2,95		3,25		3,7		4,4		5,45		6,65	
	lower tol.	2,2		2,6		2,85		3,35		4,05		5,05		6,2	
d_h	upper tol.	6,8 +0,3		7,8 +0,3		8,7 +0,4		9,4 +0,4		11,8 +0		14,8 +0		18,5 +0	
	lower tol.	-0,3		-0,3		-0,4		-0,4		-0,6		-0,5		-0,5	
d_s	upper tol.	2,75		3,15		3,45		3,9		4,7		5,8		7,1	
	lower tol.	2,55		2,95		3,25		3,7		4,5		5,6		6,9	
P ±10%		2,6		3,0		3,4		3,8		4,5		6,0		7,5	
k	upper tol.	2,1		2,5		2,7		3,0		3,6		4,7		6,0	
	lower tol.	1,8		2,1		2,3		2,6		3,1		4,0		5,2	
f	upper tol.	1,05		1,3		1,35		1,35		1,95		2,2		3,3	
	lower tol.	0,75		1,0		0,95		0,95		1,55		1,7		2,8	
Recess		HD/T-15		HD/T-15		HD/T-25		HD/T-25		HD/T-25		HD/T-40		HD/T-40	
t	upper tol.	1,47		1,65		1,8		2,15		2,6		3,15		3,85	
	lower tol.	1,27		1,4		1,5		1,85		2,3		2,85		3,4	
A		3,35		3,35		4,53		4,53		4,53		6,8		6,8	
L		Lv	Lt	Lv	Lt	Lv	Lt	Lv	Lt	Lv	Lt	Lv	Lt	Lv	Lt
20		16													
25		21		20		20		20							
30		26	18*	25	20	24	20	24		24					
35		31	21*	30	20	29	20	29	20	28					
40		36	24*	35	25	34	25	34	23	33					
45		41	27*	40	25	39	25	39	28	38					
50		46	31*	45	30	44	30	44	28	43	30				
55				50	35	49	30	49	38	48	30				
60				54	35	54	35	54	38	53	35				
65					40	60	35	60	38	58	35				
70					40	60	40	60	42	60	40				
75							40	60	42	60	40				
80							50	60	47	60	45		60		60
90									55		55		60		60
100									60		60		60		80
110									60		60		70		80
120									60		60		70		80
130											60		70		80
140			Lv and „*"without shank ribs								60		70		80
150											60		70		80
160											60		70		100
180											60		100		100
190											60		100		100
200											60		100		100
220 - 300		with 20mm grading									60		100		100
320 - 400		with 20mm grading									60		100		100
420 - 500		with 20mm grading									60		100		100

Other screw lengths with $L_{min} \leq L \leq L_{max}$ and other thread lengths lg $\geq$ 4*d up to max. standard thread length, are allowed

HECO-FIX-plus, HECO-TOPIX, HECO-TOPIX-T and HECO-TOPIX-CC screws

HECO-TOPIX Raised Countersunk Head
T-Drive
Stainless steel

Annex 6.19

electronic copy of the eta by dibt: eta-11/0284

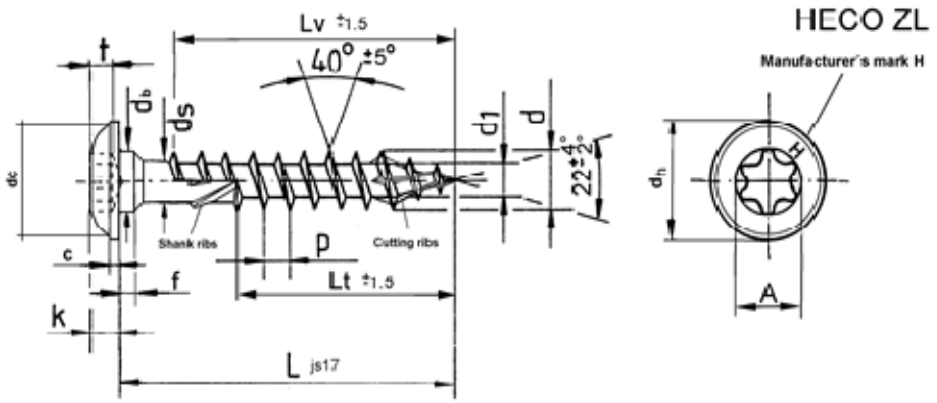

Nom. diameter								Ø 6,0		Ø 8,0		Ø 10,0	
d	upper tol. lower tol.							6,2 +0,3 -0,3		8 +0,4 -0,1		10 +0,45 -0,1	
d_1	upper tol. lower tol.							3,95 3,55		5,45 5,05		6,65 6,2	
d_h	upper tol. lower tol.							14 +1 -1		17,5 +1 -1		22,5 +1 -1	
d_b	upper tol. lower tol.							6,2 +0,3 -0,3		8 +0,5 -0,5		10 +0,5 -0,5	
d_s	upper tol. lower tol.							4,4 4,2		5,8 5,6		7,1 6,9	
dc								ca. 12		ca. 16		ca. 20	
P ±10%								4,5		6,0		7,5	
k	upper tol. lower tol.							2,9 2,2		4,0 3,3		4,2 3,5	
f	upper tol. lower tol.							1,8 1,1		2,6 2,0		2,6 2,0	
c	upper tol. lower tol.							1,7 1,2		2,0 1,5		2,3 1,7	
Recess								HD/T-25		HD/T-40		HD/T-40	
t	upper tol. lower tol.							2,7 2,4		3,5 2,6		4,0 3,0	
A								4,5		6,8		6,8	
L		Lv	Lt	Lv	Lt	Lv	Lt	Lv	Lt	Lv	Lt	Lv	Lt
40								33					
50								43		40		40	
60								53		50		50	
70								60		60		60	
80								70	60	70	60	70	60
90								83	70	80	60	80	60
100								93	70	80	60	90	60
120								113	70	100	70	100	80
140								L_V=L-d	70	L_V=L-d	70	L_V=L-d	80
160									70		100		100
180		Lv and „*“without shank ribs							70		100		100
200									70		100		100
220-380		with 20mm grading							70		100		100
380-500		with 20mm grading							70		100		100

Other screw lengths with $L_{min} \leq L \leq L_{max}$ and other thread lengths lg ≥ 4*d up to max. standard thread length, are allowed

HECO-FIX-plus, HECO-TOPIX, HECO-TOPIX-T and HECO-TOPIX-CC screws

HECO-TOPIX Flange Head
T-Drive
Stainless steel

Annex 6.20

electronic copy of the eta by dibt: eta-11/0284

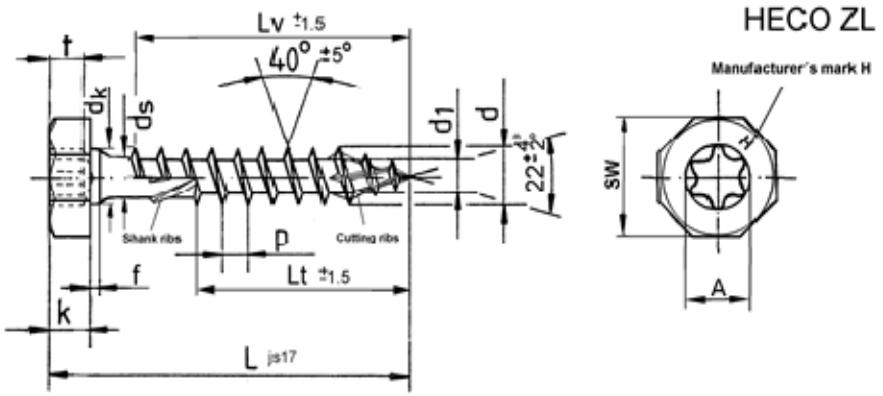

Nom. diameter															
											Ø 6,0		Ø 8,0		Ø 10,0	
d	upper tol. lower tol.										6,2 +0,3 -0,3		8 +0,4 -0,1		10 +0,45 -0,1	
*d*1	upper tol. lower tol.										3,95 3,55		5,45 5,05		6,65 6,2	
SW	upper tol. lower tol.										10 +0 -0,3		13 +0 -0,3		15 +0 -0,33	
*d*k	upper tol. lower tol.										6,2 +0,3 -0,3		8 +0,5 -0,5		10 +0 -0,2	
*d*s	upper tol. lower tol.										4,4 4,2		5,8 5,6		7,1 6,9	
P ±10%											4,5		6,0		7,5	
k	upper tol. lower tol.										4,8 4,4		5,2 4,8		5,3 4,7	
f	upper tol. lower tol.										2,3 1,7		2,3 1,7		2,3 1,7	
Recess											HD/T-25		HD/T-40		HD/T-40	
t	upper tol. lower tol.										2,7 2,4		3,5 2,6		4,0 3,0	
A											4,5		6,8		6,8	
L		Lv	Lt	Lv	Lt	Lv	Lt	Lv	Lt	Lv	Lt	Lv	Lt	Lv	Lt
40										33					
50										43		40		40	
60										53		50		50	
70										60		60		60	
80										70	60	70	60	70	60
90										83	70	80	60	80	60
100										93	70	80	60	90	60
120										113	70	100	70	100	80
140										L_V=L-7	70	L_V=L-10	70	L_V=L-10	80
160											70		100		100
180											70		100		100
200											70		100		100
220-380											70		100		100
380-500											70		100		100

Other screw lengths with $L_{min} \leq L \leq L_{max}$ and other thread lengths lg $\geq$ 4*d up to max. standard thread length, are allowed

HECO-FIX-plus, HECO-TOPIX, HECO-TOPIX-T and HECO-TOPIX-CC screws

HECO-TOPIX Hexagon Head
T-Drive
Stainless steel

Annex 6.21

electronic copy of the eta by dibt: eta-11/0284

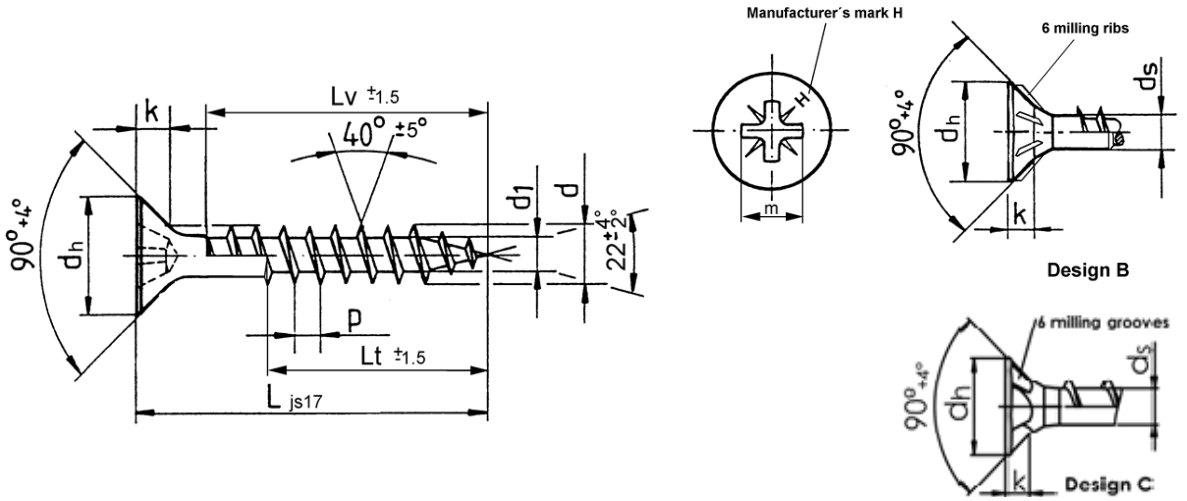

Nom. diameter		Ø 3,5		Ø 4,0		Ø 4,5		Ø 5,0		Ø 6,0		Ø 8,0		Ø 10,0	
d	upper tol.	3,5	+0,2	4,0	+0,2	4,4	+0,3	4,9	+0,35	6,0	+0,3	7,8	+0,4	10	+0,2
	lower tol.		-0,3		-0,3		-0,25		-0,25		-0,4		-0,4		-0,5
d_1	upper tol.	2,35		2,6		2,9		3,2		3,95		5,2		6,5	
	lower tol.	2,0		2,25		2,5		2,8		3,5		4,7		6,0	
d_h	upper tol.	6,8	+0,3	7,8	+0,3	8,7	+0,4	9,4	+0,4	11,8	+0	14,8	+0	18,5	+0
	lower tol.		-0,3		-0,3		-0,4		-0,4		-0,6		-0,5		-0,5
d_s	upper tol.	2,65		2,95		3,3		3,7		4,4		5,8		7,1	
	lower tol.	2,45		2,75		3,1		3,5		4,2		5,6		6,9	
P	±10%	1,75-2,1		2,0-2,5		2,25-2,8		2,5-3,1		3,0-3,75		4,0		5,0	
k	upper tol.	2,1		2,5		2,7		3,0		3,6		4,7		6,0	
	lower tol.	1,8		2,1		2,3		2,6		3,1		4,0		5,2	
Recess Z		2		2		2		2		3		4		4	
t	upper tol.	2,06		2,51		3,1		3,45		3,45		4,32		5,65	
	lower tol.	1,7		2,05		2,64		3,0		3,0		3,86		5,2	
m		4,0		4,4		4,9		5,3		6,6		8,5		9,8	
L		Lv	Lt	Lv	Lt	Lv	Lt	Lv	Lt	Lv	Lt	Lv	Lt	Lv	Lt
25		21	15	20		19		20							
30		26	18	25	18	24		24		24					
35		31	21	30	22	29	22	29	22	28					
40		36	23	35	25	34	24	34	24	33	24				
45		41	28	40	27	39	27	39	27	38	28				
50		46	31	45	30	44	29	44	29	43	31				
55				50	37	59	37	49	37	48	33				
60				54	37	54	37	54	37	53	36		42		
65				60	42	60	42	60	42	60	43				
70				60	42	60	42	60	42	60	43		42		
75				60	47	60	47	60	48	60	48				
80				60	47	60	47	60	48	60	48		60		60
90							60	60	54	60	53		60		60
100							60		60	60	60		80		80
110									70		70				
120									70		70		80		80
130											70				
140											70		80		100
150											70				
160											80		80		100
180											80		80		100
190											80				
200											80		100		100
220											80		100		100
240											80		100		100
260 - 300		with 20mm grading									80		100		100
320 – 460		with 20mm grading									80		100		100
480 – 500		with 20mm grading													100

Other screw lengths with $L_{min} \leq L \leq L_{max}$ and other thread lengths lg $\geq$ 4*d up to max. standard thread length, are allowed

HECO-FIX-plus, HECO-TOPIX, HECO-TOPIX-T and HECO-TOPIX-CC screws

HECO-FIX-plus Countersunk Head
Pozi-Drive
Carbon steel

Annex 6.22

electronic copy of the eta by dibt: eta-11/0284

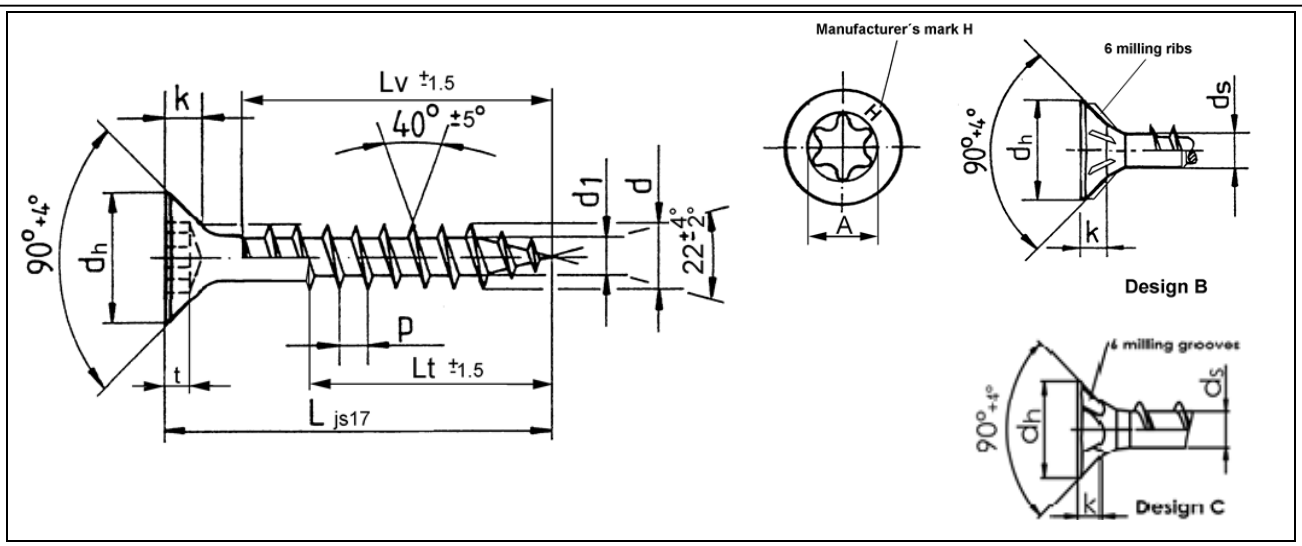

Nom. diameter		Ø 3,5		Ø 4,0		Ø 4,5		Ø 5,0		Ø 6,0		Ø 8,0		Ø 10,0	
d	upper tol.	3,5 +0,2		4,0 +0,2		4,4 +0,3		4,9 +0,35		6,0 +0,3		7,8 +0,4		10 +0,2	
	lower tol.	-0,3		-0,3		-0,25		-0,25		-0,4		-0,4		-0,5	
d_1	upper tol.	2,35		2,6		2,9		3,2		3,95		5,2		6,5	
	lower tol.	2,0		2,25		2,5		2,8		3,5		4,7		6,0	
d_h	upper tol.	6,8 +0,3		7,8 +0,3		8,7 +0,4		9,4 +0,4		11,8 +0		14,8 +0		18,5 +0	
	lower tol.	-0,3		-0,3		-0,4		-0,4		-0,6		-0,5		-0,5	
d_s	upper tol.	2,65		2,95		3,3		3,7		4,4		5,8		7,1	
	lower tol.	2,45		2,75		3,1		3,5		4,2		5,6		6,9	
P	±10%	1,75-2,1		2,0-2,5		2,25-2,8		2,5-3,1		3,0-3,75		4,0		5,0	
k	upper tol.	2,1		2,5		2,7		3,0		3,6		4,7		6,0	
	lower tol.	1,8		2,1		2,3		2,6		3,1		4,0		5,2	
Recess		HD/T-15		HD/T-15		HD/T-25		HD/T-25		HD/T-25		HD/T-40		HD/T-40	
t	upper tol.	1,47		1,65		1,8		2,15		2,6		3,15		3,85	
	lower tol.	1,27		1,4		1,5		1,85		2,3		2,85		3,4	
A		3,35		3,35		4,53		4,53		4,53		6,8		6,8	
L		Lv	Lt	Lv	Lt	Lv	Lt	Lv	Lt	Lv	Lt	Lv	Lt	Lv	Lt
25		21	15	20		19		20							
30		26	18	25	18	24		24		24					
35		31	21	30	22	29	22	29	22	28					
40		36	23	35	25	34	24	34	24	33	24				
45		41	28	40	27	39	27	39	27	38	28				
50		46	31	45	30	44	29	44	29	43	31				
55				50	37	59	37	49	37	48	33				
60				54	37	54	37	54	37	53	36		42		
65				60	42	60	42	60	42	60	43				
70				60	42	60	42	60	42	60	43		42		
75				60	47	60	47	60	48	60	48				
80				60	47	60	47	60	48	60	48		60		60
90							60	60	54	60	53		60		60
100							60		60	60	60		80		80
110									70		70				
120									70		70		80		80
130											70				
140											70		80		100
150											70				
160											80		80		100
180											80		80		100
190											80				
200											80		100		100
220											80		100		100
240											80		100		100
260 - 300		with 20mm grading									80		100		100
320 – 460		with 20mm grading									80		100		100
480 – 500		with 20mm grading													100

Other screw lengths with $L_{min} \leq L \leq L_{max}$ and other thread lengths lg $\geq$ 4*d up to max. standard thread length, are allowed

HECO-FIX-plus, HECO-TOPIX, HECO-TOPIX-T and HECO-TOPIX-CC screws

HECO-FIX-plus Countersunk Head
T-Drive
Carbon steel

Annex 6.23

electronic copy of the eta by dibt: eta-11/0284

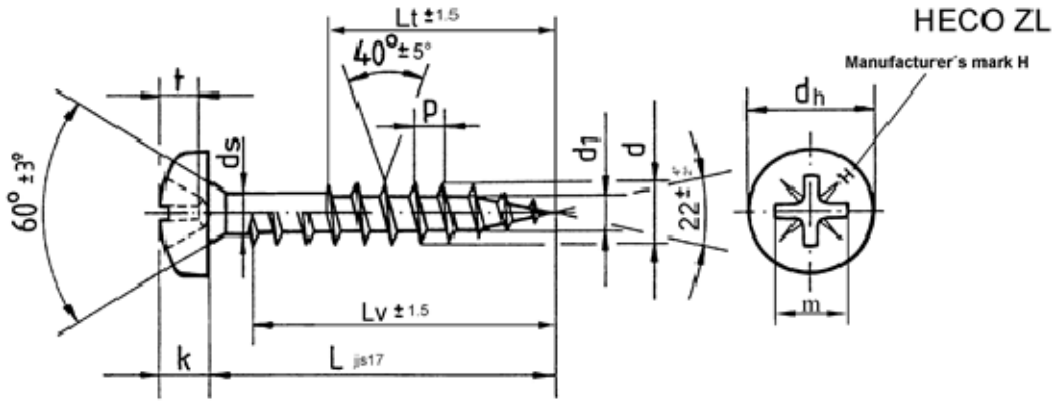

Nom. diameter		Ø 3,5		Ø 4,0		Ø 4,5		Ø 5,0		Ø 6,0		Ø 8,0		Ø 10,0	
d	upper tol.	3,5 +0,2		4,0 +0,2		4,4 +0,3		4,9 +0,35		6,0 +0,3		7,8 +0,4		10 +0,2	
	lower tol.	-0,3		-0,3		-0,25		-0,25		-0,4		-0,4		-0,5	
d_1	upper tol.	2,35		2,6		2,9		3,2		3,95		5,2		6,5	
	lower tol.	2,0		2,25		2,5		2,8		3,5		4,7		6,0	
d_h	upper tol.	6,8 +0,3		7,8 +0,3		8,7 +0,4		9,4 +0,4		11,8 +0		14,8 +0		18,5 +0	
	lower tol.	-0,3		-0,3		-0,4		-0,4		-0,6		-0,5		-0,5	
d_s	upper tol.	2,65		2,95		3,3		3,7		4,4		5,8		7,1	
	lower tol.	2,45		2,75		3,1		3,5		4,2		5,6		6,9	
P ±10%		1,75-2,1		2,0-2,5		2,25-2,8		2,5-3,1		3,0-3,75		4,0		5,0	
k	upper tol.	2,6		2,9		3,05		3,4		4,0		5,4		6,5	
	lower tol.	2,35		2,55		2,75		3,1		3,7		5,0		6,1	
Recess Z		2		2		2		2		3		4		4	
t	upper tol.	1,85		2,46		2,72		3,15		3,48		4,17		5,69	
	lower tol.	1,6		2,2		2,26		2,69		3,02		3,71		5,23	
m		3,8		4,4		4,6		5,1		6,7		8,5		9,9	
L		Lv	Lt	Lv	Lt	Lv	Lt	Lv	Lt	Lv	Lt	Lv	Lt	Lv	Lt
25		22	15	22		22		22							
30		27	18	27	18	27		27		27					
35		32	21	32	22	32	22	32	22	32					
40		37	23	37	25	37	24	37	24	37	24				
45		42	28	42	27	42	27	42	27	42	28				
50		47	31	47	30	46	29	47	29	46	31				
55				50	37	50	37	51	37	51	33				
60				55	37	54	37	54	37	54	36		42		
65				60	42	60	42	60	42	60	43				
70				60	42	60	42	60	42	60	43		42		
75				60	47	60	47	60	48	60	48				
80				60	47	60	47	60	48	60	48		60		60
90							60	60	54	60	53		60		60
100							60		60		60		80		80
110									70		70				
120									70		70		80		80
130											70				
140											70		80		100
150											70				
160											80		80		100
180											80		80		100
190											80				
200											80		100		100
220											80		100		100
240											80		100		100
260 - 300		with 20mm grading									80		100		100
320 – 460		with 20mm grading											100		100
480 – 500		with 20mm grading													100

Other screw lengths with $L_{min} \leq L \leq L_{max}$ and other thread lengths lg $\geq$ 4*d up to max. standard thread length, are allowed

HECO-FIX-plus, HECO-TOPIX, HECO-TOPIX-T and HECO-TOPIX-CC screws

HECO-FIX-plus Pan Head
Pozi-Drive
Carbon Steel

Annex 6.24

electronic copy of the eta by dibt: eta-11/0284

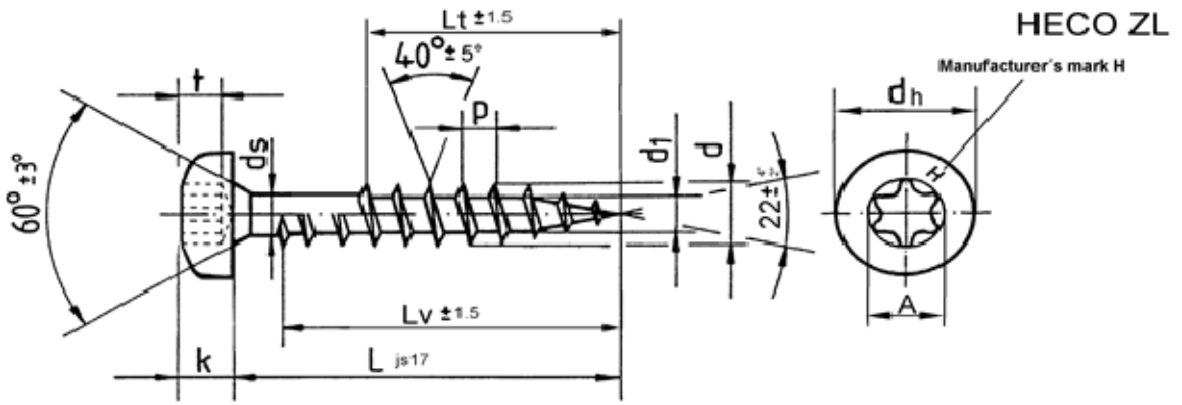

Nom. diameter		Ø 3,5		Ø 4,0		Ø 4,5		Ø 5,0		Ø 6,0		Ø 8,0		Ø 10,0	
d	upper tol. lower tol.	3,5 +0,2 -0,3		4,0 +0,2 -0,3		4,4 +0,3 -0,25		4,9 +0,35 -0,25		6,0 +0,3 -0,4		7,8 +0,4 -0,4		10 +0,2 -0,5	
d_1	upper tol. lower tol.	2,35 2,0		2,6 2,25		2,9 2,5		3,2 2,8		3,95 3,5		5,2 4,7		6,5 6,0	
d_h	upper tol. lower tol.	6,8 +0,3 -0,3		7,8 +0,3 -0,3		8,7 +0,4 -0,4		9,4 +0,4 -0,4		11,8 +0 -0,6		14,8 +0 -0,5		18,5 +0 -0,5	
d_s	upper tol. lower tol.	2,65 2,45		2,95 2,75		3,3 3,1		3,7 3,5		4,4 4,2		5,8 5,6		7,1 6,9	
P	±10%	1,75-2,1		2,0-2,5		2,25-2,8		2,5-3,1		3,0-3,75		4,0		5,0	
k	upper tol. lower tol.	2,6 2,35		2,9 2,55		3,05 2,75		3,4 3,1		4,0 3,7		5,4 5,0		6,5 6,1	
Recess		HD/T-15		HD/T-15		HD/T-25		HD/T-25		HD/T-25		HD/T-40		HD/T-40	
t	upper tol. lower tol.	1,5 1,2		1,7 1,3		1,9 1,4		2,2 1,8		2,7 2,2		3,15 2,85		3,85 3,4	
A		3,35		3,35		4,53		4,53		4,53		6,8		6,8	
L		Lv	Lt	Lv	Lt	Lv	Lt	Lv	Lt	Lv	Lt	Lv	Lt	Lv	Lt
25		22	15	22		22		22							
30		27	18	27	18	27		27		27					
35		32	21	32	22	32	22	32	22	32					
40		37	23	37	25	37	24	37	24	37	24				
45		42	28	42	27	42	27	42	27	42	28				
50		47	31	47	30	46	29	47	29	46	31				
55				50	37	50	37	51	37	51	33				
60				55	37	54	37	54	37	54	36		42		
65				60	42	60	42	60	42	60	43				
70				60	42	60	42	60	42	60	43		42		
75				60	47	60	47	60	48	60	48				
80				60	47	60	47	60	48	60	48		60		60
90							60	60	54	60	53		60		60
100							60		60		60		80		80
110									70		70				
120									70		70		80		80
130											70				
140											70		80		100
150											70				
160											80		80		100
180											80		80		100
190											80				
200											80		100		100
220											80		100		100
240											80		100		100
260 - 300		with 20mm grading									80		100		100
320 – 460		with 20mm grading											100		100
480 – 500		with 20mm grading													100

Other screw lengths with $L_{min} \leq L \leq L_{max}$ and other thread lengths lg $\geq$ 4*d up to max. standard thread length, are allowed

HECO-FIX-plus, HECO-TOPIX, HECO-TOPIX-T and HECO-TOPIX-CC screws

HECO-FIX-plus Pan Head
T-Drive
Carbon steel

Annex 6.25

electronic copy of the eta by dibt: eta-11/0284

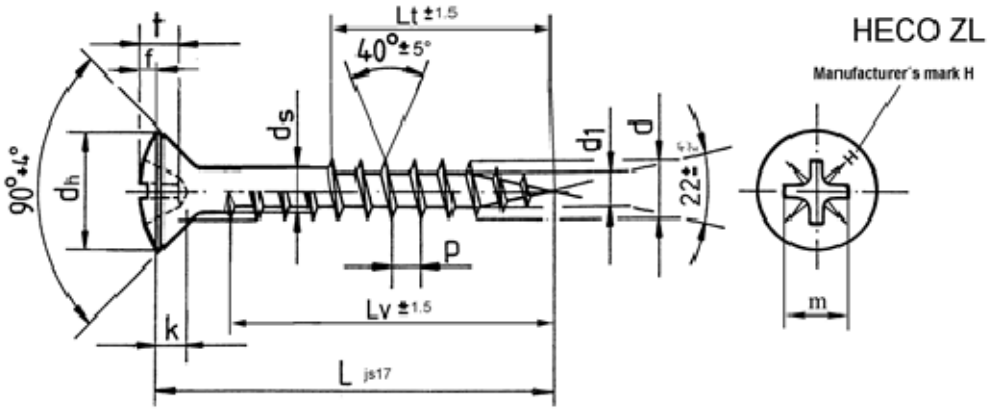

Nom. diameter		Ø 3,5		Ø 4,0		Ø 4,5		Ø 5,0		Ø 6,0		Ø 8,0		Ø 10,0	
d	upper tol.	3,5 +0,2		4,0 +0,2		4,4 +0,3		4,9 +0,35		6,0 +0,3		7,8 +0,4		10 +0,2	
	lower tol.	-0,3		-0,3		-0,25		-0,25		-0,4		-0,4		-0,5	
d_1	upper tol.	2,35		2,6		2,9		3,2		3,95		5,2		6,5	
	lower tol.	2,0		2,25		2,5		2,8		3,5		4,7		6,0	
d_h	upper tol.	6,8 +0,3		7,8 +0,3		8,7 +0,4		9,4 +0,4		11,8 +0		14,8 +0		18,5 +0	
	lower tol.	-0,3		-0,3		-0,4		-0,4		-0,6		-0,5		-0,5	
d_s	upper tol.	2,65		2,95		3,3		3,7		4,4		5,8		7,1	
	lower tol.	2,45		2,75		3,1		3,5		4,2		5,6		6,9	
P ±10%		1,75-2,1		2,0-2,5		2,25-2,8		2,5-3,1		3,0-3,75		4,0		5,0	
k	upper tol.	2,1		2,5		2,7		3,0		3,6		4,7		6,0	
	lower tol.	1,8		2,1		2,3		2,6		3,1		4,0		5,2	
f	upper tol.	1,2		1,3		1,45		1,55		1,95		2,2		3,3	
	lower tol.	0,9		1,0		1,15		1,15		1,55		1,7		2,8	
Recess Z		2		2		2		2		3		4		4	
t	upper tol.	2,11		2,72		3,15		3,35		3,86		4,52		6,17	
	lower tol.	1,6		2,26		2,6		2,89		3,4		4,06		5,71	
m		4,0		4,6		5,1		5,3		7,1		8,8		10,4	
L		Lv	Lt	Lv	Lt	Lv	Lt	Lv	Lt	Lv	Lt	Lv	Lt	Lv	Lt
25		21	15	20		19		20							
30		26	18	25	18	24		24		24					
35		31	21	30	22	29	22	29	22	28					
40		36	23	35	25	34	24	34	24	33	24				
45		41	28	40	27	39	27	39	27	38	28				
50		46	31	45	30	44	29	44	29	43	31				
55				50	37	59	37	49	37	48	33				
60				54	37	54	37	54	37	53	36		42		
65				60	42	60	42	60	42	60	43				
70				60	42	60	42	60	42	60	43		42		
75				60	47	60	47	60	48	60	48				
80				60	47	60	47	60	48	60	48		60		60
90							60	60	54	60	53		60		60
100							60		60	60	60		80		80
110									70		70				
120									70		70		80		80
130											70				
140											70		80		100
150											70				
160											80		80		100
180											80		80		100
190											80				
200											80		100		100
220											80		100		100
240											80		100		100
260 - 300		with 20mm grading									80		100		100
320 – 460		with 20mm grading									80		100		100
480 – 500		with 20mm grading													100

Other screw lengths with $L_{min} \leq L \leq L_{max}$ and other thread lengths lg $\geq$ 4*d up to max. standard thread length, are allowed

HECO-FIX-plus, HECO-TOPIX, HECO-TOPIX-T and HECO-TOPIX-CC screws

HECO-FIX-plus Raised Countersunk Head
Pozi-Drive
Carbon steel

Annex 6.26

electronic copy of the eta by dibt: eta-11/0284

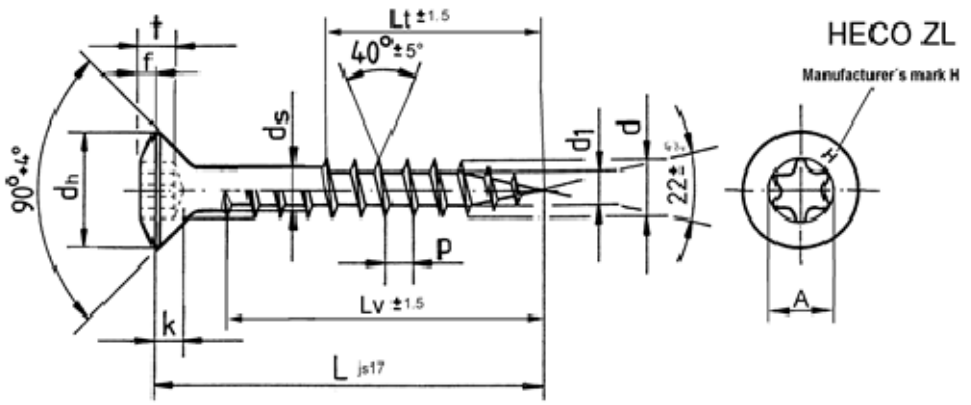

Nom. diameter		Ø 3,5		Ø 4,0		Ø 4,5		Ø 5,0		Ø 6,0		Ø 8,0		Ø 10,0	
d	upper tol.	3,5 +0,2		4,0 +0,2		4,4 +0,3		4,9 +0,35		6,0 +0,3		7,8 +0,4		10 +0,2	
	lower tol.	-0,3		-0,3		-0,25		-0,25		-0,4		-0,4		-0,5	
d_1	upper tol.	2,35		2,6		2,9		3,2		3,95		5,2		6,5	
	lower tol.	2,0		2,25		2,5		2,8		3,5		4,7		6,0	
d_h	upper tol.	6,8 +0,3		7,8 +0,3		8,7 +0,4		9,4 +0,4		11,8 +0		14,8 +0		18,5 +0	
	lower tol.	-0,3		-0,3		-0,4		-0,4		-0,6		-0,5		-0,5	
d_s	upper tol.	2,65		2,95		3,3		3,7		4,4		5,8		7,1	
	lower tol.	2,45		2,75		3,1		3,5		4,2		5,6		6,9	
P ±10%		1,75-2,1		2,0-2,5		2,25-2,8		2,5-3,1		3,0-3,75		4,0		5,0	
k	upper tol.	2,1		2,5		2,7		3,0		3,6		4,7		6,0	
	lower tol.	1,8		2,1		2,3		2,6		3,1		4,0		5,2	
f	upper tol.	1,0		1,3		1,2		1,3		1,95		2,1		3,3	
	lower tol.	0,7		1,0		0,9		0,9		1,55		1,7		2,8	
Recess		HD/T-15		HD/T-15		HD/T-25		HD/T-25		HD/T-25		HD/T-40		HD/T-40	
t	upper tol.	1,47		1,65		1,8		2,15		2,6		3,15		3,85	
	lower tol.	1,27		1,4		1,5		1,85		2,3		2,85		3,4	
A		3,35		3,35		4,53		4,53		4,53		6,8		6,8	
L		Lv	Lt	Lv	Lt	Lv	Lt	Lv	Lt	Lv	Lt	Lv	Lt	Lv	Lt
25		21	15	20		19		20							
30		26	18	25	18	24		24		24					
35		31	21	30	22	29	22	29	22	28					
40		36	23	35	25	34	24	34	24	33	24				
45		41	28	40	27	39	27	39	27	38	28				
50		46	31	45	30	44	29	44	29	43	31				
55				50	37	59	37	49	37	48	33				
60				54	37	54	37	54	37	53	36		42		
65				60	42	60	42	60	42	60	43				
70				60	42	60	42	60	42	60	43		42		
75				60	47	60	47	60	48	60	48				
80				60	47	60	47	60	48	60	48		60		60
90							60	60	54	60	53		60		60
100							60		60	60	60		80		80
110									70		70				
120									70		70		80		80
130											70				
140											70		80		100
150											70				
160											80		80		100
180											80		80		100
190											80				
200											80		100		100
220											80		100		100
240											80		100		100
260 - 300		with 20mm grading									80		100		100
320 – 460		with 20mm grading									80		100		100
480 – 500		with 20mm grading													100

Other screw lengths with $L_{min} \leq L \leq L_{max}$ and other thread lengths lg $\geq$ 4*d up to max. standard thread length, are allowed

HECO-FIX-plus, HECO-TOPIX, HECO-TOPIX-T and HECO-TOPIX-CC screws

HECO-FIX-plus Raised Countersunk Head
T-Drive
Carbon steel

Annex 6.27

electronic copy of the eta by dibt: eta-11/0284

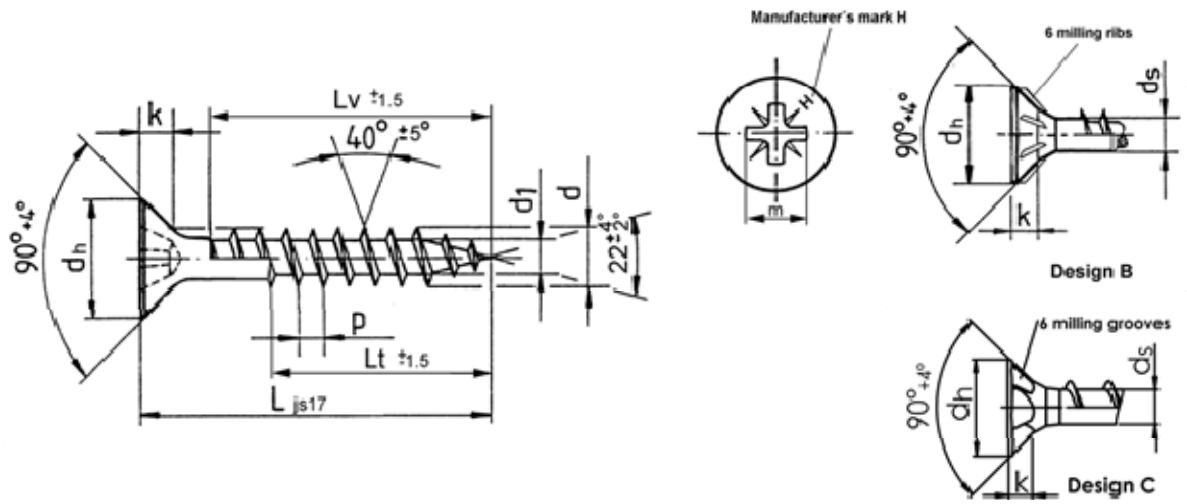

Nom. diameter		Ø 3,5		Ø 4,0		Ø 4,5		Ø 5,0		Ø 6,0		Ø 8,0		Ø 10,0	
d	upper tol.	3,5 +0,25		4,0 +0,25		4,5 +0,25		5,0 +0,25		6,0 +0,3		7,8 +0,4		10 +0,2	
	lower tol.	-0,3		-0,3		-0,3		-0,3		-0,4		-0,4		-0,5	
d_1	upper tol.	2,5		2,9		3,1		3,5		4,1		5,2		6,5	
	lower tol.	2,2		2,55		2,7		3,05		3,65		4,7		6,0	
d_h	upper tol.	6,8 +0,3		7,8 +0,3		8,7 +0,4		9,4 +0,4		11,8 +0		14,8 +0		18,5 +0	
	lower tol.	-0,3		-0,3		-0,4		-0,4		-0,6		-0,5		-0,5	
d_s	upper tol.	2,7		3,15		3,45		3,78		4,4		5,8		7,1	
	lower tol.	2,6		2,95		3,25		3,58		4,2		5,6		6,9	
P ±10%		1,75-2,1		2,0-2,5		2,25-2,8		2,5-3,1		3,0-3,75		4,0		5,0	
k	upper tol.	2,1		2,5		2,7		3,0		3,6		4,7		6,0	
	lower tol.	1,8		2,1		2,3		2,6		3,1		4,0		5,2	
Recess Z		2		2		2		2		3		4		4	
t	upper tol.	2,06		2,51		3,1		3,45		3,45		4,32		5,65	
	lower tol.	1,7		2,05		2,64		3,0		3,0		3,86		5,2	
m		4,0		4,4		4,9		5,3		6,6		8,5		9,8	
L		Lv	Lt	Lv	Lt	Lv	Lt	Lv	Lt	Lv	Lt	Lv	Lt	Lv	Lt
25		21	15	20		19		20							
30		26	18	25	18	24		24		24					
35		31	21	30	22	29	22	29	22	28					
40		36	23	35	25	34	24	34	24	33	24				
45		41	28	40	27	39	27	39	27	38	28				
50		46	31	45	30	44	29	44	29	43	31				
55				50	37	59	37	49	37	48	33				
60				54	37	54	37	54	37	53	36		42		
65				60	42	60	42	60	42	60	43				
70				60	42	60	42	60	42	60	43		42		
75				60	47	60	47	60	48	60	48				
80				60	47	60	47	60	48	60	48		60		60
90							60	60	54	60	53		60		60
100							60		60	60	60		80		80
110									70		70				
120									70		70		80		80
130											70				
140											70		80		100
150											70				
160											80		80		100
180											80		80		100
190											80				
200											80		100		100
220											80		100		100
240											80		100		100
260 - 300		with 20mm grading									80		100		100
320 – 460		with 20mm grading									80		100		100
480 – 500		with 20mm grading													100

Other screw lengths with $L_{min} \leq L \leq L_{max}$ and other thread lengths lg $\geq$ 4*d up to max. standard thread length, are allowed

HECO-FIX-plus, HECO-TOPIX, HECO-TOPIX-T and HECO-TOPIX-CC screws

HECO-FIX-plus Countersunk Head
Pozi-Drive
Stainless steel

Annex 6.28

electronic copy of the eta by dibt: eta-11/0284

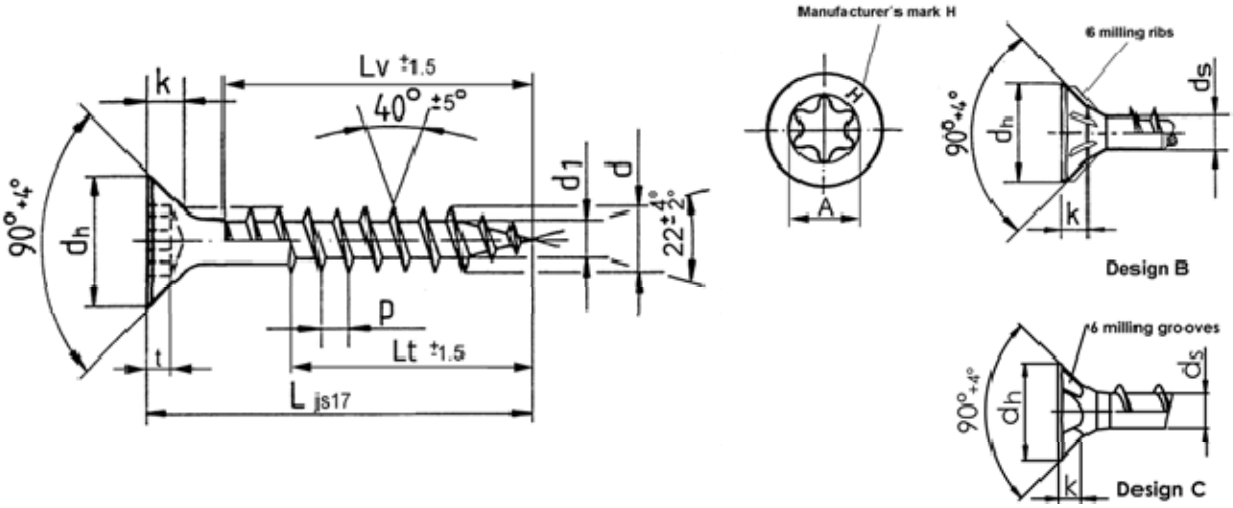

Nom. diameter		Ø 3,5		Ø 4,0		Ø 4,5		Ø 5,0		Ø 6,0		Ø 8,0		Ø 10,0	
d	upper tol.	3,5 +0,25		4,0 +0,25		4,5 +0,25		5,0 +0,25		6,0 +0,3		7,8 +0,4		10 +0,2	
	lower tol.	-0,3		-0,3		-0,3		-0,3		-0,4		-0,4		-0,5	
d_1	upper tol.	2,5		2,9		3,1		3,5		4,1		5,2		6,5	
	lower tol.	2,2		2,55		2,7		3,05		3,65		4,7		6,0	
d_h	upper tol.	6,8 +0,3		7,8 +0,3		8,7 +0,4		9,4 +0,4		11,8 +0		14,8 +0		18,5 +0	
	lower tol.	-0,3		-0,3		-0,4		-0,4		-0,6		-0,5		-0,5	
d_s	upper tol.	2,7		3,15		3,45		3,78		4,4		5,8		7,1	
	lower tol.	2,6		2,95		3,25		3,58		4,2		5,6		6,9	
P	±10%	1,75-2,1		2,0-2,5		2,25-2,8		2,5-3,1		3,0-3,75		4,0		5,0	
k	upper tol.	2,1		2,5		2,7		3,0		3,6		4,7		6,0	
	lower tol.	1,8		2,1		2,3		2,6		3,1		4,0		5,2	
Recess		HD/T-15		HD/T-15		HD/T-25		HD/T-25		HD/T-25		HD/T-40		HD/T-40	
t	upper tol.	1,47		1,65		1,8		2,15		2,6		3,15		3,85	
	lower tol.	1,27		1,4		1,5		1,85		2,3		2,85		3,4	
A		3,35		3,35		4,53		4,53		4,53		6,8		6,8	
L		Lv	Lt	Lv	Lt	Lv	Lt	Lv	Lt	Lv	Lt	Lv	Lt	Lv	Lt
25		21	15	20		19		20							
30		26	18	25	18	24		24		24					
35		31	21	30	22	29	22	29	22	28					
40		36	23	35	25	34	24	34	24	33	24				
45		41	28	40	27	39	27	39	27	38	28				
50		46	31	45	30	44	29	44	29	43	31				
55				50	37	59	37	49	37	48	33				
60				54	37	54	37	54	37	53	36		42		
65				60	42	60	42	60	42	60	43				
70				60	42	60	42	60	42	60	43		42		
75				60	47	60	47	60	48	60	48				
80				60	47	60	47	60	48	60	48		60		60
90							60	60	54	60	53		60		60
100							60		60	60	60		80		80
110									70		70				
120									70		70		80		80
130											70				
140											70		80		100
150											70				
160											80		80		100
180											80		80		100
190											80				
200											80		100		100
220											80		100		100
240											80		100		100
260 - 300		with 20mm grading									80		100		100
320 – 460		with 20mm grading									80		100		100
480 – 500		with 20mm grading													100

Other screw lengths with $L_{min} \leq L \leq L_{max}$ and other thread lengths lg $\geq$ 4*d up to max. standard thread length, are allowed

HECO-FIX-plus, HECO-TOPIX, HECO-TOPIX-T and HECO-TOPIX-CC screws

HECO-FIX-plus Countersunk Head
T-Drive
Stainless steel

Annex 6.29

electronic copy of the eta by dibt: eta-11/0284

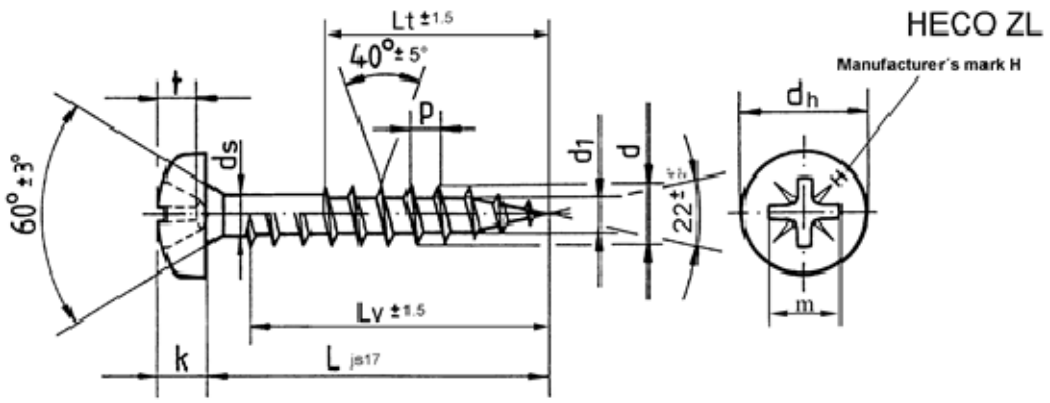

Nom. diameter		Ø 3,5		Ø 4,0		Ø 4,5		Ø 5,0		Ø 6,0		Ø 8,0		Ø 10,0	
d	upper tol.	3,5 +0,25		4,0 +0,25		4,5 +0,25		5,0 +0,25		6,0 +0,3		7,8 +0,4		10 +0,2	
	lower tol.	-0,3		-0,3		-0,3		-0,3		-0,4		-0,4		-0,5	
d_1	upper tol.	2,5		2,9		3,1		3,5		4,1		5,2		6,5	
	lower tol.	2,2		2,55		2,7		3,05		3,65		4,7		6,0	
d_h	upper tol.	6,8 +0,3		7,8 +0,3		8,7 +0,4		9,4 +0,4		11,8 +0		14,8 +0		18,5 +0	
	lower tol.	-0,3		-0,3		-0,4		-0,4		-0,6		-0,5		-0,5	
d_s	upper tol.	2,7		3,15		3,45		3,78		4,4		5,8		7,1	
	lower tol.	2,6		2,95		3,25		3,58		4,2		5,6		6,9	
P	±10%	1,75-2,1		2,0-2,5		2,25-2,8		2,5-3,1		3,0-3,75		4,0		5,0	
k	upper tol.	2,6		2,9		3,05		3,4		4,0		5,4		6,5	
	lower tol.	2,35		2,55		2,75		3,1		3,7		5,0		6,1	
Recess Z		2		2		2		2		3		4		4	
t	upper tol.	1,85		2,46		2,72		3,15		3,48		4,17		5,69	
	lower tol.	1,6		2,2		2,26		2,69		3,02		3,71		5,23	
m		3,8		4,4		4,6		5,1		6,7		8,5		9,9	
L		Lv	Lt	Lv	Lt	Lv	Lt	Lv	Lt	Lv	Lt	Lv	Lt	Lv	Lt
25		22	15	22		22		22							
30		27	18	27	18	27		27		27					
35		32	21	32	22	32	22	32	22	32					
40		37	23	37	25	37	24	37	24	37	24				
45		42	28	42	27	42	27	42	27	42	28				
50		47	31	47	30	46	29	47	29	46	31				
55				50	37	50	37	51	37	51	33				
60				55	37	54	37	54	37	54	36		42		
65				60	42	60	42	60	42	60	43				
70				60	42	60	42	60	42	60	43		42		
75				60	47	60	47	60	48	60	48				
80				60	47	60	47	60	48	60	48		60		60
90							60	60	54	60	53		60		60
100							60		60		60		80		80
110									70		70				
120									70		70		80		80
130											70				
140											70		80		100
150											70				
160											80		80		100
180											80		80		100
190											80				
200											80		100		100
220											80		100		100
240											80		100		100
260 - 300		with 20mm grading									80		100		100
320 – 460		with 20mm grading											100		100
480 – 500		with 20mm grading													100

Other screw lengths with $L_{min} \leq L \leq L_{max}$ and other thread lengths lg $\geq$ 4*d up to max. standard thread length, are allowed

HECO-FIX-plus, HECO-TOPIX, HECO-TOPIX-T and HECO-TOPIX-CC screws

HECO-FIX-plus Pan Head
Pozi-Drive
Stainless steel

Annex 6.30

electronic copy of the eta by dibt: eta-11/0284

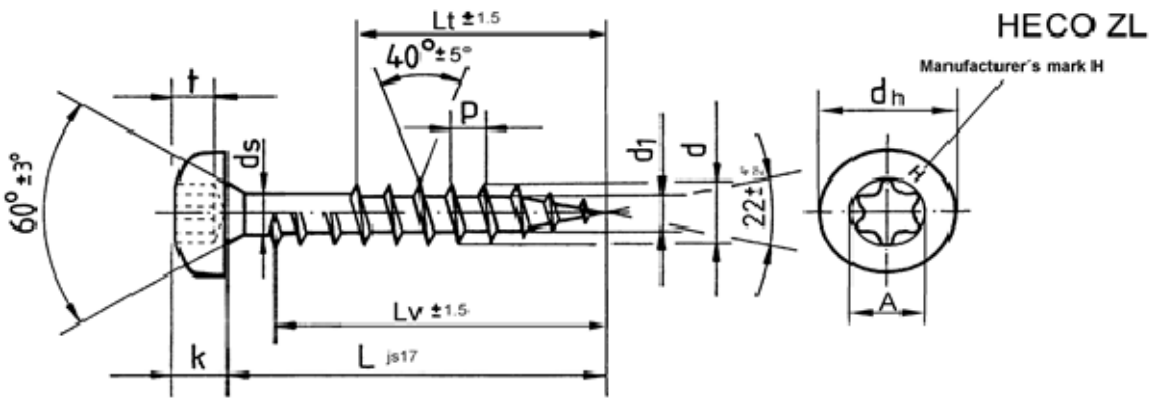

Nom. diameter		Ø 3,5		Ø 4,0		Ø 4,5		Ø 5,0		Ø 6,0		Ø 8,0		Ø 10,0	
d	upper tol. lower tol.	3,5 +0,25 -0,3		4,0 +0,25 -0,3		4,5 +0,25 -0,3		5,0 +0,25 -0,3		6,0 +0,3 -0,4		7,8 +0,4 -0,4		10 +0,2 -0,5	
d_1	upper tol. lower tol.	2,5 2,2		2,9 2,55		3,1 2,7		3,5 3,05		4,1 3,65		5,2 4,7		6,5 6,0	
d_h	upper tol. lower tol.	6,8 +0,3 -0,3		7,8 +0,3 -0,3		8,7 +0,4 -0,4		9,4 +0,4 -0,4		11,8 +0 -0,6		14,8 +0 -0,5		18,5 +0 -0,5	
d_s	upper tol. lower tol.	2,7 2,6		3,15 2,95		3,45 3,25		3,78 3,58		4,4 4,2		5,8 5,6		7,1 6,9	
P	±10%	1,75-2,1		2,0-2,5		2,25-2,8		2,5-3,1		3,0-3,75		4,0		5,0	
k	upper tol. lower tol.	2,6 2,35		2,9 2,55		3,05 2,75		3,4 3,1		4,0 3,7		5,4 5,0		6,5 6,1	
Recess		HD/T-15		HD/T-15		HD/T-25		HD/T-25		HD/T-25		HD/T-40		HD/T-40	
t	upper tol. lower tol.	1,85 1,6		2,46 2,2		2,72 2,26		3,15 2,69		3,48 3,02		3,15 2,85		3,85 3,4	
A		3,35		3,35		4,53		4,53		4,53		6,8		6,8	
L		Lv	Lt	Lv	Lt	Lv	Lt	Lv	Lt	Lv	Lt	Lv	Lt	Lv	Lt
25		22	15	22		22		22							
30		27	18	27	18	27		27		27					
35		32	21	32	22	32	22	32	22	32					
40		37	23	37	25	37	24	37	24	37	24				
45		42	28	42	27	42	27	42	27	42	28				
50		47	31	47	30	46	29	47	29	46	31				
55				50	37	50	37	51	37	51	33				
60				55	37	54	37	54	37	54	36		42		
65				60	42	60	42	60	42	60	43				
70				60	42	60	42	60	42	60	43		42		
75				60	47	60	47	60	48	60	48				
80				60	47	60	47	60	48	60	48		60		60
90							60	60	54	60	53		60		60
100							60		60		60		80		80
110									70		70				
120									70		70		80		80
130											70				
140											70		80		100
150											70				
160											80		80		100
180											80		80		100
190											80				
200											80		100		100
220											80		100		100
240											80		100		100
260 - 300		with 20mm grading									80		100		100
320 – 460		with 20mm grading											100		100
480 – 500		with 20mm grading													100

Other screw lengths with $L_{min} \leq L \leq L_{max}$ and other thread lengths lg $\geq$ 4*d up to max. standard thread length, are allowed

HECO-FIX-plus, HECO-TOPIX, HECO-TOPIX-T and HECO-TOPIX-CC screws

HECO-FIX-plus Pan Head
T-Drive
Stainless steel

Annex 6.31

electronic copy of the eta by dibt: eta-11/0284

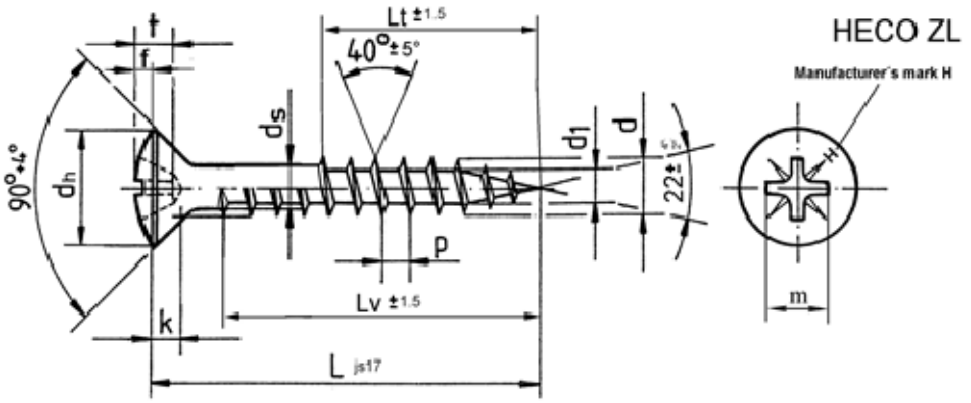

Nom. diameter		Ø 3,5		Ø 4,0		Ø 4,5		Ø 5,0		Ø 6,0		Ø 8,0		Ø 10,0	
d	upper tol. lower tol.	3,5 +0,25 -0,3		4,0 +0,25 -0,3		4,5 +0,25 -0,3		5,0 +0,25 -0,3		6,0 +0,3 -0,4		7,8 +0,4 -0,4		10 +0,2 -0,5	
d_1	upper tol. lower tol.	2,5 2,2		2,9 2,55		3,1 2,7		3,5 3,05		4,1 3,65		5,2 4,7		6,5 6,0	
d_h	upper tol. lower tol.	6,8 +0,3 -0,3		7,8 +0,3 -0,3		8,7 +0,4 -0,4		9,4 +0,4 -0,4		11,8 +0 -0,6		14,8 +0 -0,5		18,5 +0 -0,5	
d_s	upper tol. lower tol.	2,7 2,		3,15 2,95		3,45 3,25		3,78 3,58		4,4 4,2		5,8 5,6		7,1 6,9	
P ±10%		1,75-2,1		2,0-2,5		2,25-2,8		2,5-3,1		3,0-3,75		4,0		5,0	
k	upper tol. lower tol.	2,1 1,8		2,5 2,1		2,7 2,3		3,0 2,6		3,6 3,1		4,7 4,0		6,0 5,2	
f	upper tol. lower tol.	1,2 0,9		1,3 1,0		1,45 1,15		1,55 1,15		1,95 1,55		2,2 1,7		3,3 2,8	
Recess Z		2		2		2		2		3		4		4	
t	upper tol. lower tol.	2,11 1,65		2,72 2,26		3,15 2,69		3,35 2,89		3,86 3,4		4,52 4,06		6,17 5,71	
m		4,0		4,6		5,1		5,3		7,1		8,8		10,4	
L		Lv	Lt	Lv	Lt	Lv	Lt	Lv	Lt	Lv	Lt	Lv	Lt	Lv	Lt
25		21	15	20		19		20							
30		26	18	25	18	24		24		24					
35		31	21	30	22	29	22	29	22	28					
40		36	23	35	25	34	24	34	24	33	24				
45		41	28	40	27	39	27	39	27	38	28				
50		46	31	45	30	44	29	44	29	43	31				
55				50	37	59	37	49	37	48	33				
60				54	37	54	37	54	37	53	36		42		
65				60	42	60	42	60	42	60	43				
70				60	42	60	42	60	42	60	43		42		
75				60	47	60	47	60	48	60	48				
80				60	47	60	47	60	48	60	48		60		60
90							60	60	54	60	53		60		60
100							60		60	60	60		80		80
110									70		70				
120									70		70		80		80
130											70				
140											70		80		100
150											70				
160											80		80		100
180											80		80		100
190											80				
200											80		100		100
220											80		100		100
240											80		100		100
260 - 300		with 20mm grading									80		100		100
320 – 460		with 20mm grading									80		100		100
480 – 500		with 20mm grading													100

Other screw lengths with $L_{min} \leq L \leq L_{max}$ and other thread lengths lg $\geq$ 4*d up to max. standard thread length, are allowed

HECO-FIX-plus, HECO-TOPIX, HECO-TOPIX-T and HECO-TOPIX-CC screws

HECO-FIX-plus Raised Countersunk Head
Pozi-Drive
Stainless steel

Annex 6.32

electronic copy of the eta by dibt: eta-11/0284

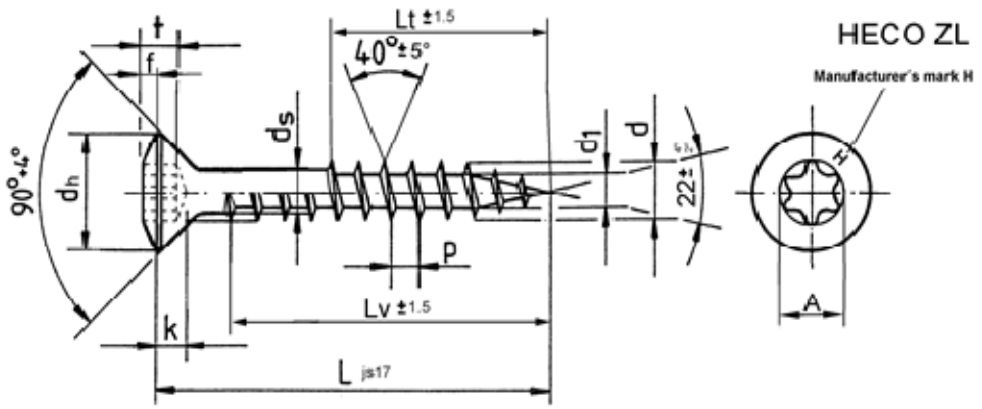

Nom. diameter		Ø 3,5		Ø 4,0		Ø 4,5		Ø 5,0		Ø 6,0		Ø 8,0		Ø 10,0	
d	upper tol.	3,5 +0,25		4,0 +0,25		4,5 +0,25		5,0 +0,25		6,0 +0,3		7,8 +0,4		10 +0,2	
	lower tol.	-0,3		-0,3		-0,3		-0,3		-0,4		-0,4		-0,5	
d_1	upper tol.	2,5		2,9		3,1		3,5		4,1		5,2		6,5	
	lower tol.	2,2		2,55		2,7		3,05		3,65		4,7		6,0	
d_h	upper tol.	6,8 +0,3		7,8 +0,3		8,7 +0,4		9,4 +0,4		11,8 +0		14,8 +0		18,5 +0	
	lower tol.	-0,3		-0,3		-0,4		-0,4		-0,6		-0,5		-0,5	
d_s	upper tol.	2,7		3,15		3,45		3,78		4,4		5,8		7,1	
	lower tol.	2,6		2,95		3,25		3,58		4,2		5,6		6,9	
P ±10%		1,75-2,1		2,0-2,5		2,25-2,8		2,5-3,1		3,0-3,75		4,0		5,0	
k	upper tol.	2,1		2,5		2,7		3,0		3,6		4,7		6,0	
	lower tol.	1,8		2,1		2,3		2,6		3,1		4,0		5,2	
f	upper tol.	1,0		1,3		1,2		1,3		1,95		2,1		3,3	
	lower tol.	0,7		1,0		0,9		0,9		1,55		1,7		2,8	
Recess		HD/T-15		HD/T-15		HD/T-25		HD/T-25		HD/T-25		HD/T-40		HD/T-40	
t	upper tol.	1,47		1,65		1,8		2,15		2,6		3,15		3,85	
	lower tol.	1,27		1,4		1,5		1,85		2,3		2,85		3,4	
A		3,35		3,35		4,53		4,53		4,53		6,8		6,8	
L		Lv	Lt	Lv	Lt	Lv	Lt	Lv	Lt	Lv	Lt	Lv	Lt	Lv	Lt
25		21	15	20		19		20							
30		26	18	25	18	24		24		24					
35		31	21	30	22	29	22	29	22	28					
40		36	23	35	25	34	24	34	24	33	24				
45		41	28	40	27	39	27	39	27	38	28				
50		46	31	45	30	44	29	44	29	43	31				
55				50	37	59	37	49	37	48	33				
60				54	37	54	37	54	37	53	36		42		
65				60	42	60	42	60	42	60	43				
70				60	42	60	42	60	42	60	43		42		
75				60	47	60	47	60	48	60	48				
80				60	47	60	47	60	48	60	48		60		60
90							60	60	54	60	53		60		60
100							60		60	60	60		80		80
110									70		70				
120									70		70		80		80
130											70				
140											70		80		100
150											70				
160											80		80		100
180											80		80		100
190											80				
200											80		100		100
220											80		100		100
240											80		100		100
260 - 300		with 20mm grading									80		100		100
320 – 460		with 20mm grading									80		100		100
480 – 500		with 20mm grading													100

Other screw lengths with $L_{min} \leq L \leq L_{max}$ and other thread lengths lg $\geq$ 4*d up to max. standard thread length, are allowed

HECO-FIX-plus, HECO-TOPIX, HECO-TOPIX-T and HECO-TOPIX-CC screws

HECO-FIX-plus Raised Countersunk Head
T-Drive
Stainless steel

Annex 6.33

electronic copy of the eta by dibt: eta-11/0284

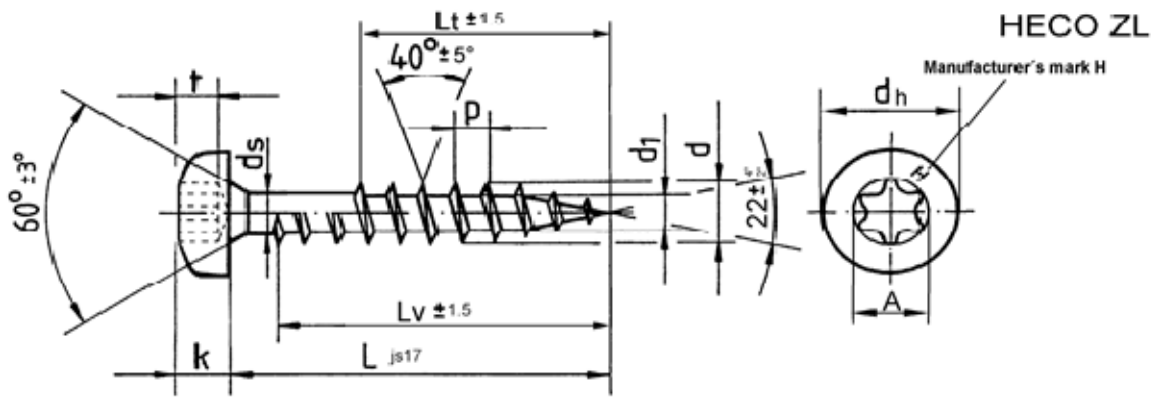

Nom. diameter						∅ 4,5		∅ 5,0						
d	upper tol. lower tol.					4,5 +0,25 -0,3		5,0 +0,25 -0,3						
d_1	upper tol. lower tol.					3,1 2,7		3,5 3,05						
d_h	upper tol. lower tol.					9,6 +0 -0,4		12 +0,0 -0,4						
d_s	upper tol. lower tol.					3,45 3,25		3,78 3,58						
P	±10%					2,25-2,8		2,5-3,1						
k	upper tol. lower tol.					2,80 2,50		3,0 2,6						
Recess						HD/T-20		HD/T-20						
t	upper tol. lower tol.					2,72 2,26		1,8 2,2						
A						3,94		3,94						
L		Lv	Lt	Lv	Lt	Lv	Lt	Lv	Lt	Lv	Lt	Lv	Lt	Lv	Lt
25						22		22	20						
30						27		27	22						
35						32	22	32	22						
40						37	24	37	24						
45						42	27	42	27						
50						46	29	47	29						
55						50	37	51	37						
60						54	37	54	37						
65						60	42	60	42						
70						60	42	60	42						
75						60	47	60	48						
80						60	47	60	48						
90							60	60	54						
100							60		60						
110									70						
120									70						

Other screw lengths with $L_{min} \leq L \leq L_{max}$ and other thread lengths lg $\geq$ 4*d up to max. standard thread length, are allowed.

electronic copy of the eta by dibt: eta-11/0284

HECO-FIX-plus, HECO-TOPIX, HECO-TOPIX-T and HECO-TOPIX-CC screws

HECO-FIX-plus Panel Head
T-Drive
Stainless steel

Annex 6.34

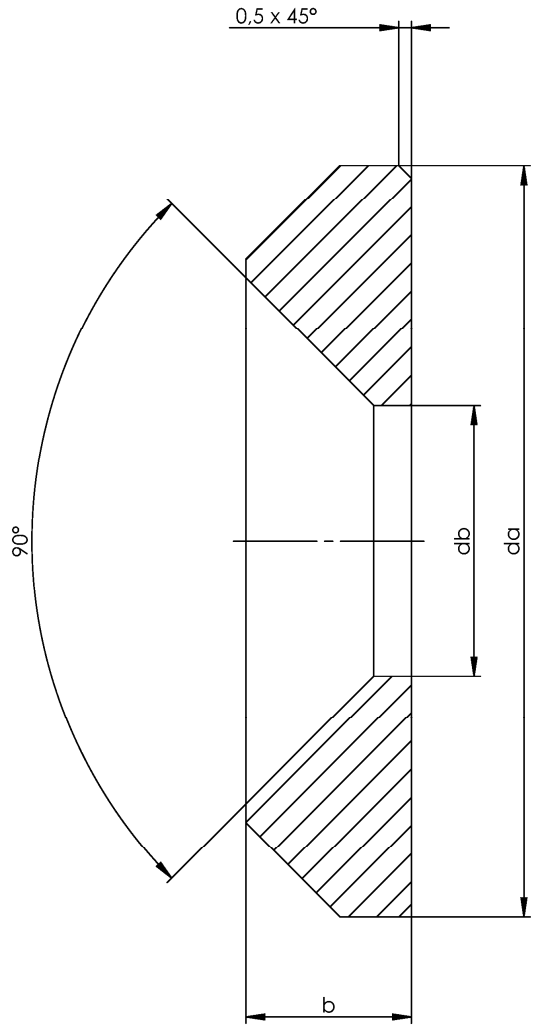

nom. diameter		Ø8,0	Ø10,0
d_b	upper tol. lower tol.	$8{,}4^{+0{,}2}_{-0{,}2}$	$10{,}8^{+0{,}5}_{0{,}5}$
d_a	upper tol. lower tol.	$25^{+1{,}0}_{-1{,}0}$	$30^{+1{,}0}_{-1{,}0}$
b	upper tol. lower tol.	5,0 4,6	6,9 6,3

HECO-FIX-plus, HECO-TOPIX, HECO-TOPIX-T and HECO-TOPIX-CC screws

HECO-Washer
Carbon and stainless steel

Annex 6.35

electronic copy of the eta by dibt: eta-11/0284