Deutsches Institut für Bautechnik DIBt

Member of EOTA
www.eota.eu

Approval body for construction products and types of construction

Bautechnisches Prüfamt

An institution established by the Federal and Laender Governments

Designated according to Article 29 of Regulation (EU) No 305/2011 and member of EOTA (European Organisation for Technical Assessment)

European Technical Assessment ETA-21/0140 of 17 March 2021

English translation prepared by DIBt - Original version in German language

General Part

Technical Assessment Body issuing the European Technical Assessment:	Deutsches Institut für Bautechnik
Trade name of the construction product	fischer channel FUS 21/1,5, FUS 21/2,0, FUS 21/2,5, FUS 41/1,5, FUS 41/2,0, FUS 41/2,5, FUS 62/2,5, FUS 21D/2,0, FUS 41D/2,5 and FUS 62D/2,5
Product family to which the construction product belongs	Products for installation systems for supporting technical building equipment
Manufacturer	fischerwerke GmbH & Co. KG Klaus-Fischer-Straße 1 72178 Waldachtal DEUTSCHLAND
Manufacturing plant	# 505017, # 513016, # 535268, # 526683
This European Technical Assessment contains	31 pages including 26 annexes which form an integral part of this assessment
This European Technical Assessment is issued in accordance with Regulation (EU) No 305/2011, on the basis of	EAD 280016-00-0602

Electronic copy of the ETA by DIBt: ETA-21/0140

The European Technical Assessment is issued by the Technical Assessment Body in its official language. Translations of this European Technical Assessment in other languages shall fully correspond to the original issued document and shall be identified as such.

Communication of this European Technical Assessment, including transmission by electronic means, shall be in full. However, partial reproduction may only be made with the written consent of the issuing Technical Assessment Body. Any partial reproduction shall be identified as such.

This European Technical Assessment may be withdrawn by the issuing Technical Assessment Body, in particular pursuant to information by the Commission in accordance with Article 25(3) of Regulation (EU) No 305/2011.

Electronic copy of the ETA by DIBt: ETA-21/0140

Specific part

1 Technical description of the product

Objects of this European Technical Assessment are the fischer channels FUS 21/1,5, FUS 21/2,0, FUS 21/2,5, FUS 41/1,5, FUS 41/2,0, FUS 41/2,5, FUS 62/2,5, FUS 21D/2,0, FUS 41D/2,5 and FUS 62D/2,5. The fischer channels FUS consist of thin-walled steel with parallel flanges and a connecting web. The flanges are turned at the end. The flanges of the channels FUS 21/1,5, FUS 21/2,0, FUS 41/1,5 and FUS 41/2,0 are designed with a linear dent. The turned flange ends are designed with a serration which makes it possible to force-fit the channels to specific channel system fixtures. The fischer channels FUS 21D/2,0, FUS 41D/2,5 and FUS 62D/2,5 consists of two identical fischer channels FUS 21/2,0, FUS 41/2,5 respectively FUS 62/2,5, attached on the web´s back and connected by spot welding. Recesses in the web of the channels (channel back) in the form of slotted holes allow the use of fasteners and fixtures. The fischer channels are delivered in lengths from 0,05 m up to 6,00 m with modular dimension of 0,05 m.

Annex A describes the dimensions and materials of the fischer channels FUS 21/1,5, FUS 21/2,0, FUS 21/2,5, FUS 41/1,5, FUS 41/2,0, FUS 41/2,5 and FUS 62/2,5.

2 Specification of the intended use in accordance with the applicable European Assessment Document (EAD)

The performance given in section 3 can only be assumed if the fischer channels FUS 21/1,5, FUS 21/2,0, FUS 21/2,5, FUS 41/1,5, FUS 41/2,0, FUS 41/2,5, FUS 62/2,5, FUS 21D/2,0, FUS 41D/2,5 and FUS 62D/2,5 are used in compliance with the specifications and under boundary conditions set out in Annex B. The test and assessment methods on which this European Technical Assessment is based lead to an assumption of a working life of the fischer channels FUS 21/1,5, FUS 21/2,0, FUS 21/2,5, FUS 41/1,5, FUS 41/2,0, FUS 41/2,5, FUS 62/2,5, FUS 21D/2,0, FUS 41D/2,5 and FUS 62D/2,5 of at least 50 years in final use under ambient temperatures in indoor areas. The indications given on the working life cannot be interpreted as a guarantee given by the producer, but are to be regarded only as a means for choosing the right products in relation to the expected economically reasonable working life of the works.

In accordance with the European Assessment Document EAD 280016-00-0602, the products for installation systems are intended to be used under dry indoor conditions for supporting:

- pipes for the transport of water not intended for human consumption,
- pipes for the transport of gas/fuel intended for the supply of building heating/cooling systems,
- technical building equipment in general,
- components of fixed fire-fighting systems.

The products for installation systems are intended to be used where failure or excessive deformation of the installation systems would

- compromise safety in case of fire (BWR 2) or
- would lead to an unacceptable risk of accidents or damage in service or in operation (BWR 4).

Electronic copy of the ETA by DIBt: ETA-21/0140

3 Performance of the product and references to the methods used for its assessment

3.1 Safety in case of fire (BWR 2)

Essential characteristic	Performance
Reaction to fire	A1
Pull-through resistance of channel back holes under fire exposure	see Annex D 1
Bending characteristics under fire exposure	see Annexes D2 – D9

3.2 Safety and accessibility in use (BWR 4)

Essential characteristic	Performance
Shape	see Annexes A1 – A4
Dimension	see Annexes A1 – A4
Material and cross-section characteristics	see Annexes A1 – A4 see Annexes B 5 – B 9
Characteristic pull-through resistance of channel back holes	see Annex C 1

4 Assessment and verification of constancy of performance (AVCP) system applied, with reference to its legal base

In accordance with the European Assessment Document EAD 280016-00-0602 the applicable European legal act is:

For products for installation systems intended to be used for supporting pipes for the transport of water not intended for human consumption the applicable European legal act is Commission Decision 1999/472/EC, as amended by Commission Decision 2001/596/EC.

The system to be applied is 4.

For products for installation systems intended to be used for supporting pipes for the transport of gas/fuel intended for the supply of building heating/cooling systems the applicable European legal act is Commission Decision 1999/472/EC, as amended by Commission Decision 2001/596/EC.

The system to be applied is 3.

For products for installation systems intended to be used for supporting technical building equipment in general the applicable European legal act is Commission Decision 97/161/EC.

The system to be applied is 2+.

For products for installation systems intended to be used for supporting components of fixed fire-fighting systems the applicable European legal act is Commission Decision 96/577/EC, as amended by Commission Decision 2002/592/EC.

The system to be applied is 1.

Electronic copy of the ETA by DIBt: ETA-21/0140

5 Technical details necessary for the implementation of the AVCP system, as provided for in the applicable EAD

The technical details necessary for the implementation of the system for the assessment and verification of constancy of performance are laid down in the control plan (confidential part of this European Technical Assessment) deposited at Deutsches Institut für Bautechnik.

Issued in Berlin on 17 March 2021 by Deutsches Institut für Bautechnik

Dr.-Ing. Ronald Schwuchow
Head of Section

beglaubigt:
Ortmann

Electronic copy of the ETA by DIBt: ETA-21/0140

Table A 1.1: Shape, dimensions and materials of channels FUS 21

Shape[1) 2)]	Designation[3)]	Length L [m]	Material
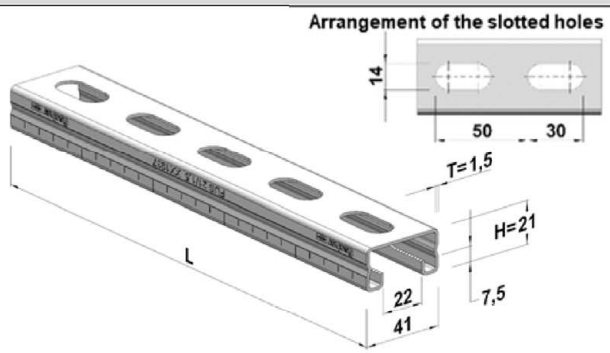	FUS 21/1,5	0,05 m to 6,00 m	S250GD+Z275-M-A-C according to EN 10346[4)]
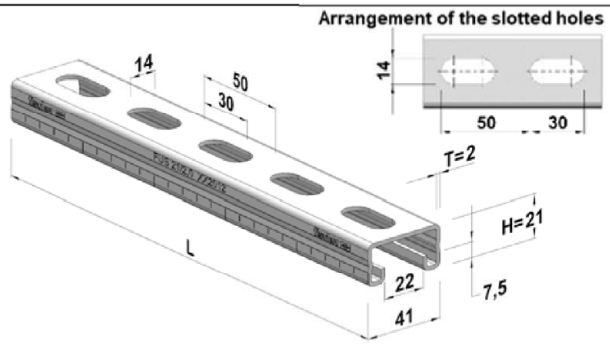	FUS 21/2,0		
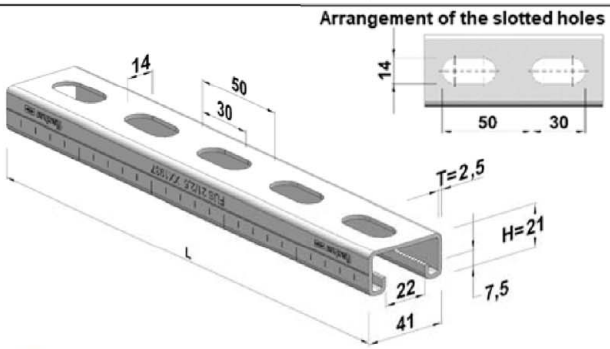	FUS 21/2,5		

[1)] Dimensions in mm

[2)] Legend of the variables in the figures:

H= Channel height
T= Material thickness of the channel
L= Length of the channel

[3)] The designation of the channel refers to the height H and the material thickness T of the channel. Example: The channel FUS 21/1,5 has a height H = 21 mm and a material thickness T = 1,5 mm.

[4)] The increased average yield strength may be taken into account because of the hardening due to the type of profiling according to EN 1993-1-3.

fischer channel FUS 21/1,5, FUS 21/2,0, FUS 21/2,5, FUS 41/1,5, FUS 41/2,0, FUS 41/2,5, FUS 62/2,5, FUS 21D/2,0, FUS 41D/2,5 and FUS 62D/2,5	Annex A 1
Product description of channels FUS 21 Shape, dimensions and materials	

Electronic copy of the ETA by DIBt: ETA-21/0140

Table A 2.1: Shape, dimensions and materials of channels FUS 41

Shape[1) 2)]	Designation[3)]	Length L [m]	Material
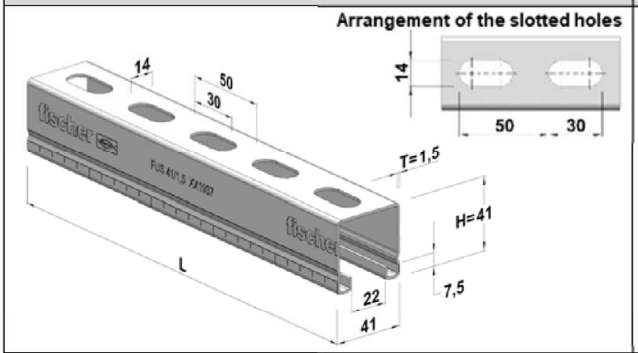	FUS 41/1,5	0,05 m to 6,00 m	S250GD+Z275-M-A-C according to EN 10346[4)]
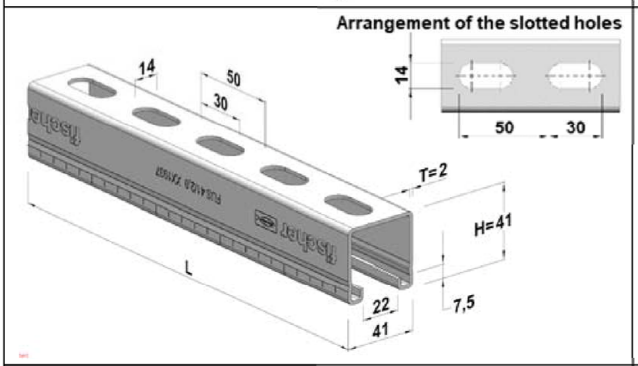	FUS 41/2,0		
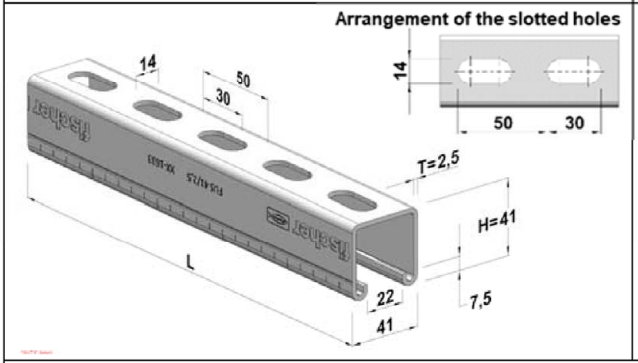	FUS 41/2,5		

[1)] Dimensions in mm

[2)] Legend of the variables in the figures:

H= Channel height
T= Material thickness of the channel
L= Length of the channel

[3)] The designation of the channel refers to the height H and the material thickness T of the channel. Example: The channel FUS 41/2,0 has a height H = 41 mm and a material thickness T = 2,0 mm.

[4)] The increased average yield strength may be taken into account because of the hardening due to the type of profiling according to EN 1993-1-3.

fischer channel FUS 21/1,5, FUS 21/2,0, FUS 21/2,5, FUS 41/1,5, FUS 41/2,0, FUS 41/2,5, FUS 62/2,5, FUS 21D/2,0, FUS 41D/2,5 and FUS 62D/2,5	Annex A 2
Product description of channels FUS 41 Shape, dimensions and materials	

Electronic copy of the ETA by DIBt: ETA-21/0140

Table A 3.1: Shape, dimensions and materials of channel FUS 62

Shape[1) 2)]	Designation[3)]	Length L [m]	Material
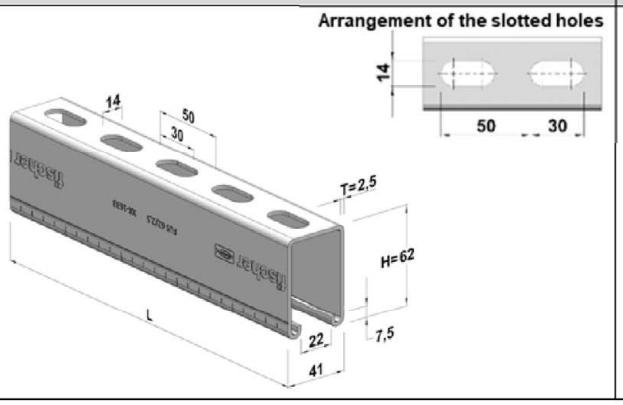	FUS 62/2,5	0,05 m to 6,00 m	S250GD+Z275-M-A-C according to EN 10346[4)]

[1)] Dimensions in mm

[2)] Legend of the variables in the figures:
H= Channel height
T= Material thickness of the channel
L= Length of the channel

[3)] The designation of the channel refers to the height H and the material thickness T of the channel. Example: The channel FUS 62/2,5 has a height H = 62 mm and a material thickness T = 2,5 mm.

[4)] The increased average yield strength may be taken into account because of the hardening due to the type of profiling according to EN 1993-1-3.

fischer channel FUS 21/1,5, FUS 21/2,0, FUS 21/2,5, FUS 41/1,5, FUS 41/2,0, FUS 41/2,5, FUS 62/2,5, FUS 21D/2,0, FUS 41D/2,5 and FUS 62D/2,5	Annex A 3
Product description of channel FUS 62 Shape, dimensions and materials	

Electronic copy of the ETA by DIBt: ETA-21/0140

Table A 4.1: Shape, dimensions and materials of double channel FUS 21D, FUS 41D and FUS 62D

Shape[1) 2)]	Designation	Length L [m]	Material
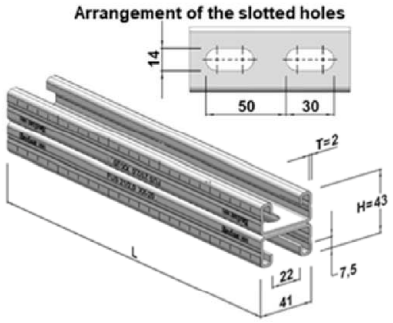	FUS 21D/2,0	0,05 m to 6,00 m	S250GD+Z275-M-A-C according to EN 10346[3)]
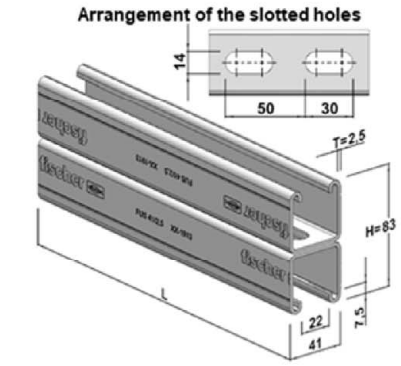	FUS 41D/2,5		
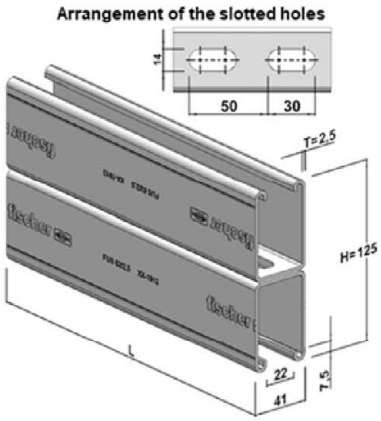	FUS 62D/2,5		

[1)] Dimensions in mm

[2)] Legend of the variables in the figures:
H= Channel height
T= Material thickness of the channel
L= Length of the channel

[3)] The increased average yield strength may be taken into account because of the hardening due to the type of profiling according to EN 1993-1-3.

fischer channel FUS 21/1,5, FUS 21/2,0, FUS 21/2,5, FUS 41/1,5, FUS 41/2,0, FUS 41/2,5, FUS 62/2,5, FUS 21D/2,0, FUS 41D/2,5 and FUS 62D/2,5	Annex A 4
Product description of double channel FUS 21D, FUS 41D und FUS 62D Shape, dimensions and materials	

Electronic copy of the ETA by DIBt: ETA-21/0140

Requirements for performance calculation of the channels FUS

- fischer channels FUS are used for load transfer of components of technical building equipment such as pipes and equipment for sprinkler, water, heating, cooling, ventilation, electrical and other installations. The performance of the load-transferring function specified for the fischer channels FUS applies to the conditions described in Section 2 of this European Technical Assessment.
- fischer channels FUS are used in installation systems for technical building equipment at ambient temperature and under fire exposure. The use of fischer channels FUS 21D, FUS 41D and FUS 62D within the scope of this European Technical Assessment is only under conditions at ambient temperature.
- The data on resistances and deformations at ambient temperature and under fire exposure apply to static and centric loads. The time data in connection with the resistance and deformation values under the influence of fire refer to the boundary conditions of the standard temperature/time curve (STTC) according to EN 1363-1:2020.
- Channels FUS mounted directly on the ceiling are installed with the channel profile open at the bottom. Fire-protection approved components on the underside are fastened with fischer sliding nut FCN Clix M10, FCN Clix M12, FCN Clix P10 or FCN Clix P12. For applications under fire exposure, the channels are anchored in the substrate with fischer washers HK 41 10,5 or HK 41 12,5 in conjunction with suitable fixing elements. For applications at ambient temperature, the FUS channels can be anchored to the substrate without using the HK 41 10,5 or HK 41 12,5 washers with suitable fixing elements through the slotted holes in the channels.
- For suspended channel systems, the channel profiles are installed with an opening at the top or bottom. Fire-protection approved components mounted on the top or bottom of suspended channel systems must be fixed in place using fischer washers HK 41 10,5 or HK 41 12,5 on both sides and nuts and threaded rods. Alternatively, the installation with fischer clamp connections FCN-Clix M10 or FCN-Clix M12 is possible. The joint between the channel and the threaded rod for suspending the system is made with fischer washers HK 41 on both sides and nuts and threaded rods which are connected non-positively.
- Threaded rods and other attachments may only be guided through unsawn long back (slotted) holes in the channel.
- The fastening elements for anchoring in the base material must be suitable for this purpose and have a fire protection certificate.
- Before installation, it must be ensured that
  - the components to be carried by the channel,
  - the mounting parts,
  - the anchoring of the channels on and in the substrate and
  - the substrate itself

  are within the permissible load range until the evaluated channel fails. In the range of loads from the standard temperature curve according to EN 1363-1:2020, the components must have a fire protection certificate that is at least equivalent to that of the evaluated channel.

fischer channel FUS 21/1,5, FUS 21/2,0, FUS 21/2,5, FUS 41/1,5, FUS 41/2,0, FUS 41/2,5, FUS 62/2,5, FUS 21D/2,0, FUS 41D/2,5 and FUS 62D/2,5	Annex B 1
Requirements for the performance	

Electronic copy of the ETA by DIBt: ETA-21/0140

Continuation of the requirements for the performance calculation of the channels FUS

- Installation must be carried out by appropriately trained personnel under the supervision of the site manager. When attaching the channel FUS to the substrate and when mounting attachments to the channel FUS, the general manufacturer's mounting instructions for attachments and fasteners must be observed.
- The performance with regard to the pull-through resistance through the channel back (slotted) holes at ambient temperature and under fire exposure is obtained in conjunction with the fastening elements according to Table B 4.1.

fischer channel FUS 21/1,5, FUS 21/2,0, FUS 21/2,5, FUS 41/1,5, FUS 41/2,0, FUS 41/2,5, FUS 62/2,5, FUS 21D/2,0, FUS 41D/2,5 and FUS 62D/2,5	Annex B 2
Requirements for the performance	

Electronic copy of the ETA by DIBt: ETA-21/0140

Components for attaching the channels FUS directly to the base material through the channel back (slotted) holes

The following illustration shows how the channels FUS are fastened directly to the substrate through the channel back (slotted) holes. The numbering refers to table B 4.1. Fastening elements according to Table B 4.1 or fastening elements whose contact surface and dimensions are the same or larger than the rated fastening elements in Table B 4.1 are approved for fastening the channel FUS directly through the channel back (slotted) holes. In addition, the yield point and the tensile strength must be equal to or greater than the rated fastening elements.

Figure B 3.1

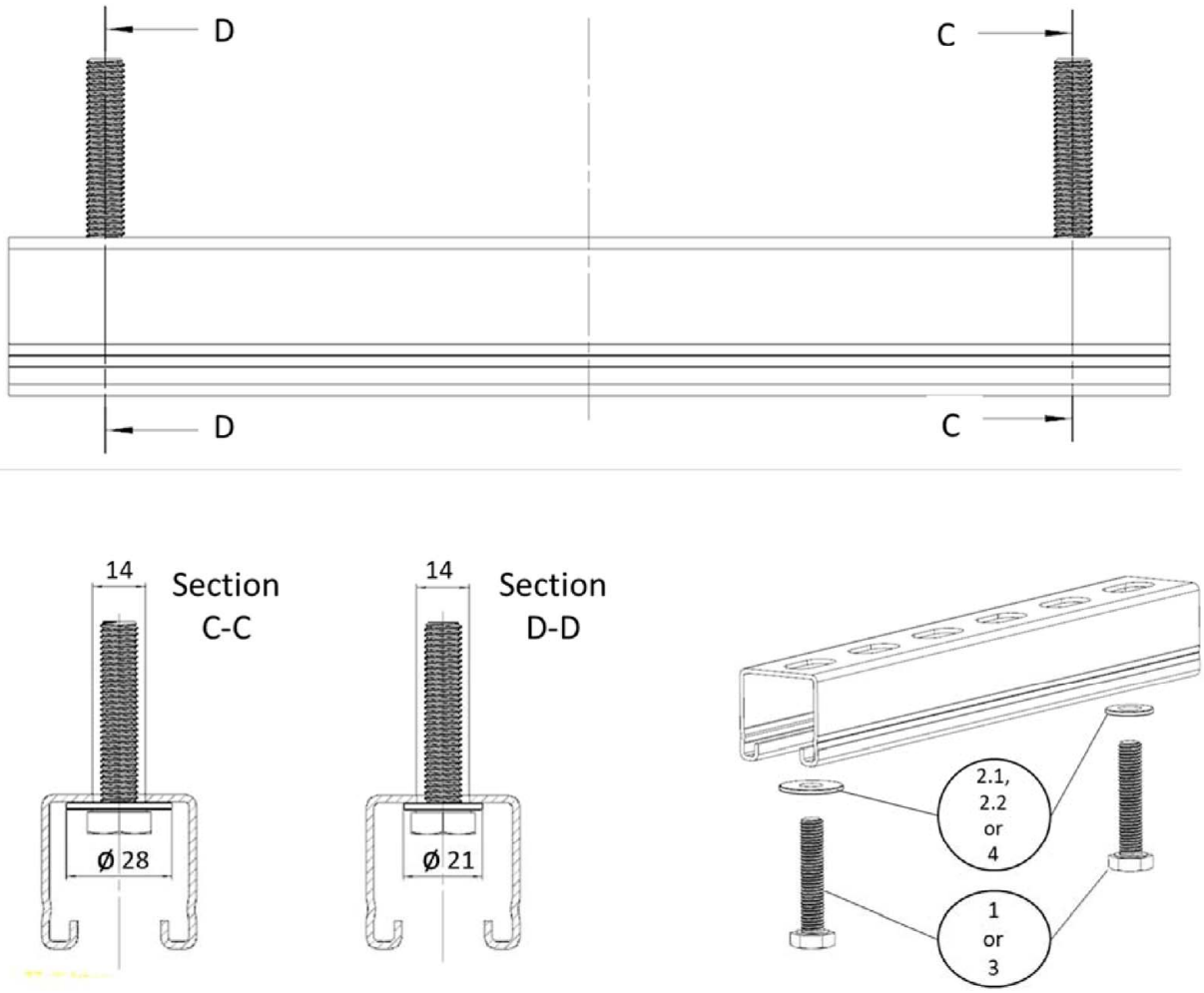

fischer channel FUS 21/1,5, FUS 21/2,0, FUS 21/2,5, FUS 41/1,5, FUS 41/2,0, FUS 41/2,5, FUS 62/2,5, FUS 21D/2,0, FUS 41D/2,5 and FUS 62D/2,5	Annex B 3
Requirements for the performance	

Electronic copy of the ETA by DIBt: ETA-21/0140

Table B 4.1 lists the fasteners that are necessary for an evaluation of the channel FUS according to Annex B3.

Table B 4.1: Fastening elements for anchoring the channel through the channel back (slotted) holes

No.	Material and geometry of the fastener	Figure	Channel
1	Hex bolt: M10, Strength class 8.8, galvanized steel Material according to EN ISO 4017:2014	(see Figure B 4.2)	FUS 21/1,5 FUS 21/2,0 FUS 21/2,5 FUS 41/1,5 FUS 41/2,0 FUS 41/2,5 FUS 62/2,5
2.1	Washer: 10x21x2,0, galvanized steel, material according to EN 10139:2016+A1:2020	(see Figure B 4.1)	
2.2	Washer: 10x28x2,0, galvanized steel, material according to EN 10139:2016+A1:2020		
3	Hex bolt: M12, Strength class 8.8, galvanized steel Material according to EN ISO 4017:2014	(see Figure B 4.2)	
4	Washer: 12x24x2,5, galvanized steel, material according to EN 10139:2016+A1:2020	(see Figure B 4.1)	

Figure B 4.1

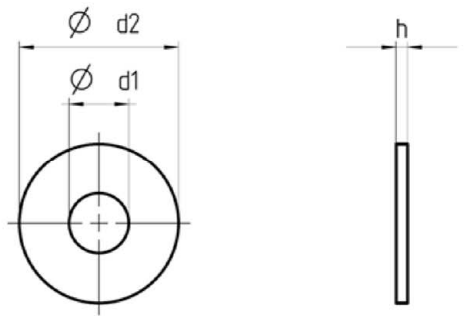

Designation	H [mm]	Ø d1 [mm]	Ø d2 [mm]
U 10x21	2,0	10,5	21
U 10x28			28
U 12x24	2,5	12,5	24

Figure B 4.2

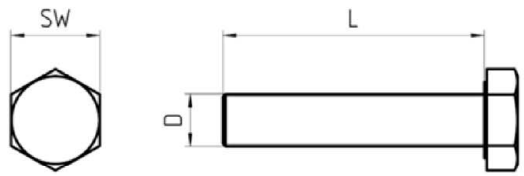

Designation	L [mm]	D [mm]	SW
Hex bolt acc. to ISO 8765 (2001-03)	-*1)	10	17
Hex bolt acc. to ISO 8765 (2001-03)	-*1)	12	19

*1) The length of the screw has no influence on the characteristic pull-through resistance through the back (slotted) holes.

Electronic copy of the ETA by DIBt: ETA-21/0140

Consideration of the evaluated cross-sectional profile of the channels FUS for the area calculation

Due to the inhomogeneity of the cross-section of the channels FUS, the cross-section values for each channel are calculated in the averaged cross-section profile of the channels FUS (see Table B 5.1, No. 3). The averaged cross-sectional profile is calculated on the basis of the cross-sectional profile in the back (slotted) hole of the channel and the cross-section outside the back (slotted) hole of the channel (see Table B 5.1, No. 1 and No. 2). The pictures of the cross-sectional profiles refer to the channel FUS 21/1,5 as an example.

Table B 5.1: Designation of the cross-section profiles, explanation exemplary on the basis of channel FUS 21/1,5

Number	Designation	Picture of the cross-section profile
1	Cross section in back (slotted) holes	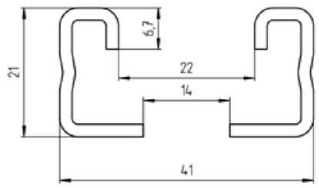
2	Cross section outside the back (slotted) holes	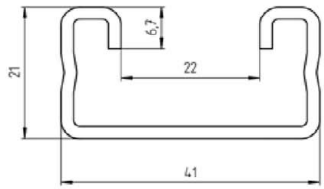
3	Averaged cross-section	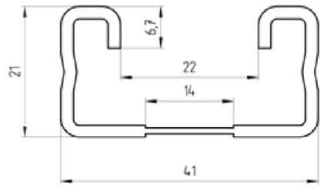

For the channel FUS 41/2,5, the calculation of the averaged cross-sectional profile is based on the parameters in Figure B 5.1 and Figure B 6.1 as shown in Annex B 6.

Figure B 5.1: Parameters for the calculation of the averaged cross-sectional profile

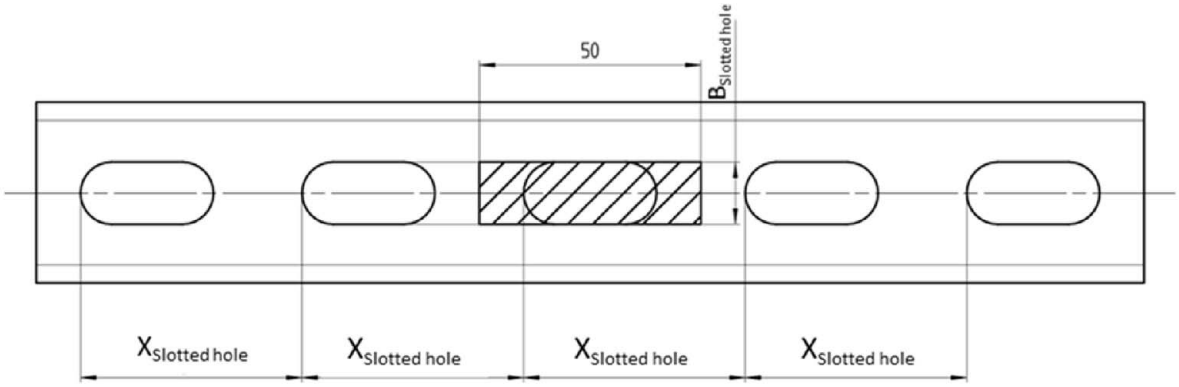

fischer channel FUS 21/1,5, FUS 21/2,0, FUS 21/2,5, FUS 41/1,5, FUS 41/2,0, FUS 41/2,5, FUS 62/2,5, FUS 21D/2,0, FUS 41D/2,5 and FUS 62D/2,5	Annex B 5
Requirements for the performance	

Electronic copy of the ETA by DIBt: ETA-21/0140

Continuation of the consideration of the evaluated cross-sectional profile of the channels FUS for the area calculation

The averaged material thickness $t_{Average}$ results from the equations Eq. B 6.1 and Eq. B 6.2. Figure B 6.1 shows the parameters in the averaged cross-sectional profile. The units of the parameters are shown in Table B 6.1.

$$A_{Extract} = B_{Slotted\ hole} * X_{Slotted\ hole} \text{ [mm²]} \qquad \text{Eq. B 6.1}$$

$$t_{Average} = t * \left(1 - \frac{A_{Slotted\ hole}}{A_{Extract}}\right) \text{ [mm]} \qquad \text{Eq. B 6.2}$$

Figure B 6.1: Parameters in the averaged cross-sectional profile of the FUS channel

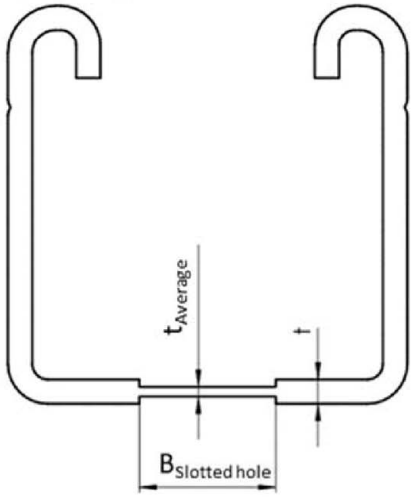

Table B 6.1: Units of the parameters

Designation of the parameters	Parameter	Unit
Standard wall thickness	t	mm
Width of the slotted holes	$B_{Slotted\ hole}$	mm
Distance between the slotted holes	$X_{Slotted\ hole}$	mm
Cross sectional area of the slotted holes of the FUS41/2,5	$A_{Slotted\ hole}$	mm²
Cross sectional area of the channel extract	$A_{Extract}$	mm²
Averaged wall thickness	$t_{Average}$	mm

The properties of the averaged cross-sectional profile are shown in Tables B 7.1 and B 9.1.

fischer channel FUS 21/1,5, FUS 21/2,0, FUS 21/2,5, FUS 41/1,5, FUS 41/2,0, FUS 41/2,5, FUS 62/2,5, FUS 21D/2,0, FUS 41D/2,5 and FUS 62D/2,5	Annex B 6
Requirements for the performance	

Electronic copy of the ETA by DIBt: ETA-21/0140

Table B 7.1: Properties of the cross section of the channels FUS 21

Designation	Symbol	Unit	FUS 21/1,5	FUS 21/2,0	FUS 21/2,5
Cross-sectional area	A	mm^2	142,7	181,6	211,3
Max. width	b_{max}	mm	41,0	41,0	41,0
Max. height	h_{max}	mm	21,0	21,0	21,0
Thrust surfaces	A_y	mm^2	28,2	37,1	47,3
	A_z	mm^2	40,3	53,2	64,1
Moments of inertia	I_y	mm^4	8806,3	10636,3	11351,7
	I_z	mm^4	36788,9	46255,0	52423,6
Polar moments of inertia	I_p	mm^4	45594,3	56891,3	63775,3
	$I_{p,M}$	mm^4	110613,4	133545,7	141344,8
radii of inertia	i_y	mm	7,9	7,7	7,3
	i_z	mm	16,1	16,0	15,8
Polar radii of inertia	i_p	mm	17,9	17,7	17,4
	$i_{p,M}$	mm	27,8	27,1	25,9
radius of camber inertia	$i_{\omega,M}$	mm	7,0	6,8	6,5
Cross-section scope	U	mm	208,2	201,1	189,5
Torsional moment of inertia	I_T	mm^4	101,3	228,8	412,4
Buckling resistors	$I_{\omega,S}$	mm^6	22114376,6	25565424,0	25082502,6
	$I_{\omega,M}$	mm^6	5365085,7	6090530,0	5909972,0
Moments of resistance	$W_{y,max}$	mm^3	923,5	1125,1	1244,5
	$W_{y,min}$	mm^3	-768,1	-921,2	-955,7
	$W_{z,max}$	mm^3	1793,2	2256,4	2557,3
	$W_{z,min}$	mm^3	-1793,2	-2256,4	-2557,3
Buckling resistance moments	$W_{\omega,M,max}$	mm^4	14714,6	17881,0	19214,8
	$W_{\omega,M,min}$	mm^4	-14714,6	-17881,0	-19214,8
Max. plastic moments of resistance	$W_{pl,y}$	mm^3	1037,3	1285,9	1426,2
	$W_{pl,z}$	mm^3	2182,2	2761,9	3166,6

fischer channel FUS 21/1,5, FUS 21/2,0, FUS 21/2,5, FUS 41/1,5, FUS 41/2,0, FUS 41/2,5, FUS 62/2,5, FUS 21D/2,0, FUS 41D/2,5 and FUS 62D/2,5	Annex B 7
Properties of the cross section of the channels FUS 21	

Electronic copy of the ETA by DIBt: ETA-21/0140

Table B 8.1: Properties of the cross-section of the channels FUS 41 and FUS 62

Designation	Symbol	Unit	FUS 41/1,5	FUS 41/2,0	FUS 41/2,5	FUS 62/2,5
Cross-sectional area	A	mm^2	202,4	261,6	311,3	416,7
Max. width	b_{max}	mm	41,0	41,0	41,0	41,0
Max. height	h_{max}	mm	41,0	41,0	41,0	62,0
Thrust surfaces	A_y	mm^2	25,9	33,9	43,1	37,9
	A_z	mm^2	100,0	132,8	163,7	266,3
Moments of inertia	I_y	mm^4	45760,6	57195,0	64416,1	187445,0
	I_z	mm^4	60138,8	76683,4	89531,2	128492,8
Polar moments of inertia	I_p	mm^4	105899,4	133878,4	153947,3	315937,7
	$I_{p,M}$	mm^4	468267,8	578515,3	639597,8	1845066,5
radii of inertia	i_y	mm	15,0	14,8	14,4	21,2
	i_z	mm	17,2	17,1	17,0	17,6
Polar radii of inertia	i_p	mm	22,9	22,6	22,2	27,6
	$i_{p,M}$	mm	48,1	47,0	45,3	66,6
radius of camber inertia	$i_{\omega,M}$	mm	7,6	7,4	7,2	7,1
Cross-section scope	U	mm	287,9	281,0	269,5	353,5
Torsional moment of inertia	I_T	mm^4	146,1	335,4	620,7	839,5
Buckling resistors	$I_{\omega,S}$	mm^6	134888369,7	161966884,4	172045789,2	562863517,1
	$I_{\omega,M}$	mm^6	27311868,3	31821722,1	32711392,0	91838674,6
Moments of resistance	$W_{y,max}$	mm^3	2352,3	2966,4	3426,5	6435,3
	$W_{y,min}$	mm^3	-2123,9	-2633,5	-2901,5	-5702,2
	$W_{z,max}$	mm^3	2933,7	3740,8	4367,5	6268,1
	$W_{z,min}$	mm^3	-2933,7	-3740,8	-4367,3	-6268,1
Buckling resistance moments	$W_{\omega,M,max}$	mm^4	34628,2	42555,6	46874,0	82283,2
	$W_{\omega,M,min}$	mm^4	-34628,2	-42555,6	-46874,0	-82283,3
Max. plastic moments of resistance	$W_{pl,y}$	mm^3	2759,6	3500,6	4038,2	7856,3
	$W_{pl,z}$	mm^3	3363,1	4320,9	5091,5	7112,5

fischer channel FUS 21/1,5, FUS 21/2,0, FUS 21/2,5, FUS 41/1,5, FUS 41/2,0, FUS 41/2,5, FUS 62/2,5, FUS 21D/2,0, FUS 41D/2,5 and FUS 62D/2,5	Annex B 8
Properties of the cross-section of the channels FUS 41 and FUS 62	

Electronic copy of the ETA by DIBt: ETA-21/0140

Table B 9.1: Properties of the cross section of the channel FUS 21D/2,0, FUS 41D/2,5 and FUS 62D/2,5

Designation	Symbol	Unit	FUS 21D/2,0	FUS 41D/2,5	FUS 62D/2,5
Cross-sectional area	A	mm^2	363,1	622,5	832,6
Max. width	b_{max}	mm	41,0	41,0	41,0
Max. height	h_{max}	mm	42,0	82,0	124,0
Thrust surfaces	A_y	mm^2	68,1	78,8	70,6
	A_z	mm^2	119,5	320,5	505,0
Moments of inertia	I_y	mm^4	53716,8	348812,9	1081369,3
	I_z	mm^4	92484,9	179065,5	257013,3
Polar moments of inertia	I_p	mm^4	146201,7	527878,5	1338382,6
	$I_{p,M}$	mm^4	146201,7	527878,5	1338382,6
radii of inertia	i_y	mm	12,2	23,7	36,0
	i_z	mm	16,0	17,0	17,6
Polar radii of inertia	i_p	mm	20,1	29,1	40,1
	$i_{p,M}$	mm	20,1	29,1	40,1
radius of camber inertia	$i_{\omega,M}$	mm	13,9	17,5	18,9
Cross-section scope	U	mm	332,0	473,4	641,5
Torsional moment of inertia	I_T	mm^4	909,5	2066,7	2504,5
Buckling resistors	$I_{\omega,S}$	mm^6	28399718,1	160707448,8	476980723,1
	$I_{\omega,M}$	mm^6	28399718,1	160707448,3	476980719,5
Moments of resistance	$W_{y,max}$	mm^3	2558,0	8507,9	17441,0
	$W_{y,min}$	mm^3	-2558,0	-8507,8	-17441,0
	$W_{z,max}$	mm^3	4511,5	8734,8	12536,9
	$W_{z,min}$	mm^3	-4511,5	-8735,0	-12537,0
Buckling resistance moments	$W_{\omega,M,max}$	mm^4	55558,1	161573,0	308965,1
	$W_{\omega,M,min}$	mm^4	-55557,5	-161569,5	-308971,4
Max. plastic moments of resistance	$W_{pl,y}$	mm^3	3431,2	11698,6	24243,5
	$W_{pl,z}$	mm^3	5522,3	10182,9	14226,2

fischer channel FUS 21/1,5, FUS 21/2,0, FUS 21/2,5, FUS 41/1,5, FUS 41/2,0, FUS 41/2,5, FUS 62/2,5, FUS 21D/2,0, FUS 41D/2,5 and FUS 62D/2,5	Annex B 9
Properties of the cross section of the channel FUS 21D/2,0, FUS 41D/2,5 and FUS 62D/2,5	

Electronic copy of the ETA by DIBt: ETA-21/0140

Characteristic pull-through resistance of channel back holes

Table C 1.1 shows the characteristic pull-through resistance through the channel back (slotted) holes at ambient temperature for the channels FUS for each fastening according to Annex B 3 and Annex B 4.

Table C.1.1: Characteristic pull-through resistance of channel back (slotted) holes at ambient temperature

Channel	Fasteners	Characteristic pull-through resistance
	[ ]	F_{RK} [N]
FUS 21/1,5	M10 hexagon head screw and washer 10x21x2.0	3470
	M12 hexagon head screw and washer 12x24x2.5	4910
FUS 21/2,0	M10 hexagon head screw and washer 10x21x2.0	4680
	M12 hexagon head screw and washer 12x24x2.5	7220
FUS 21/2,5	M10 hexagon head screw and washer 10x21x2.0	5570
	M12 hexagon head screw and washer 12x24x2.5	7540
FUS 41/1,5	M10 hexagon head screw and washer 10x21x2.0	3240
	M12 hexagon head screw and washer 12x24x2.5	4510
FUS 41/2,0	M10 hexagon head screw and washer 10x21x2.0	4340
	M12 hexagon head screw and washer 12x24x2.5	6140
FUS 41/2,5	M10 hexagon head screw and washer 10x21x2.0	6640
	M12 hexagon head screw and washer 12x24x2.5	10570
FUS 62/2,5	M10 hexagon head screw and washer 10x21x2.0	3570
	M12 hexagon head screw and washer 12x24x2.5	9490

In case no national partial safety factor γ_M for determination of design resistances is given, the recommendation is γ_M = 1,4

fischer channel FUS 21/1,5, FUS 21/2,0, FUS 21/2,5, FUS 41/1,5, FUS 41/2,0, FUS 41/2,5, FUS 62/2,5, FUS 21D/2,0, FUS 41D/2,5 and FUS 62D/2,5	Annex C 1
Characteristic pull-through resistance of channel back holes	

Electronic copy of the ETA by DIBt: ETA-21/0140

Pull-through resistance of channel back holes under fire exposure

Table D 1.1 shows the pull-through resistance through the back (slotted) holes of the channel under the fire load of the standard temperature/time curve for a period of 30 to 360 minutes per fastening according to Annex B 3 and Annex B 4 for the channel FUS.

Table D 1.1: Pull-through resistance $F_{Rk,t}$ through the back (slotted) holes in the back of the channel under fire exposure

Channel	Pull through resistance $F_{Rk,t}$ [N]									
	30 min	60 min	90 min	120 min	150 min	180 min	210 min	240 min	300 min	360 min
FUS 21/1,5	-[1]									
FUS 21/2,0	-[1]									
FUS 21/2,5	-[1]									
FUS 41/1,5	-[1]									
FUS 41/2,0	-[1]									
[2]FUS 41/2,5	799	444	326	267	232	-[1]	-[1]	-[1]	-[1]	-[1]
[3]FUS 41/2,5	1126	630	465	382	333	300	-[1]	-[1]	-[1]	-[1]
FUS 62/2,5	-[1]									

The function curves belonging to table D 1.1 according to equation Eq. D 1.1 describe the pull-through resistance through the channel back (slotted) holes over time and are shown in figure D 1.1. The regression factors c_1, c_2 and c_3 are shown in Table D 1.2.

$$F_{Rk(t_u)} = c_3 \left(\frac{c_1 + c_2}{t_u}\right) \text{ [kN]} \qquad \textbf{Eq. D 1.1}$$

Eq. D 1.1 and figure D 1.1 only applicable for FUS 41/2,5[2] within 30min ≤ t_u ≤ 152min and for FUS 41/2,5[3] within 30min ≤ t_u ≤ 180min

Table D 1.2: Regression factors of the equation Eq. D 1.1

Channel	Regression factors		
	C1	C2	C3
FUS 41/2,5[2]	108,3	25333,4	0,83
FUS 41/2,5[3]	167,6	37016,0	0,80

Figure D 1.1: Functional curves of the pull-through resistance $F_{Rk(t_u)}$ through the slotted holes in the channel back under fire exposure

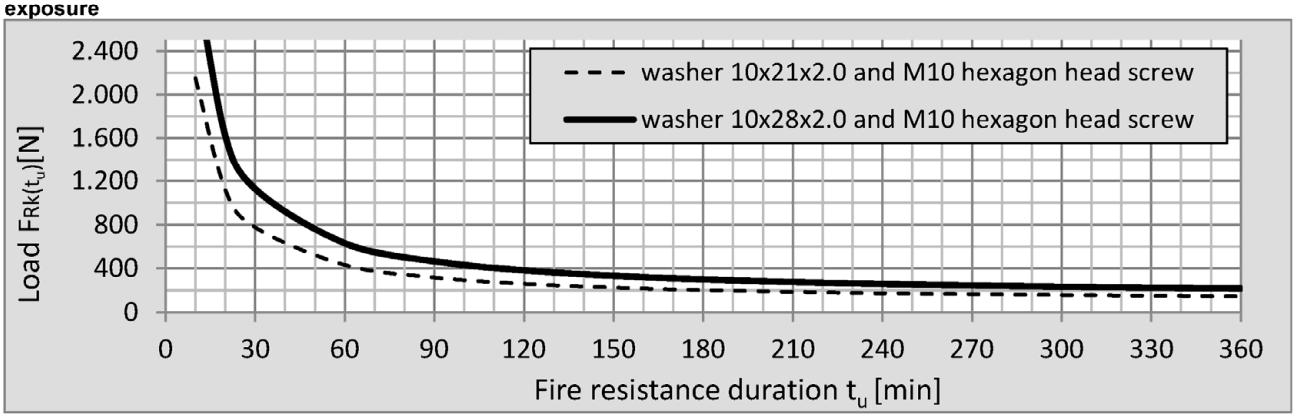

[1] No performance assessed
[2] According to annex B 3 and B 4 with washer 10x21x2.0 and M10 hexagon head screw
[3] According to annex B 3 and B 4 with washer 10x28x2.0 and M10 hexagon head screw

fischer channel FUS 21/1,5, FUS 21/2,0, FUS 21/2,5, FUS 41/1,5, FUS 41/2,0, FUS 41/2,5, FUS 62/2,5, FUS 21D/2,0, FUS 41D/2,5 and FUS 62D/2,5	Annex D 1
Pull-through resistance of channel back holes under fire exposure	

Electronic copy of the ETA by DIBt: ETA-21/0140

Tensile stress behavior of the channels FUS at variable component temperature and constant channel deformation $\varepsilon_{B,\theta a}$ = 2 %

On the basis of unsteady thermal creep tests, material samples of the channels FUS were loaded with tensile stresses of 5 N/mm² to 30 N/mm² with a step size of 5 N/mm² under the load of the standard temperature/time curve. The test was carried out according to EN ISO 6892-2:2018. The temperature was determined at which an elastic elongation of $\varepsilon_{B,\theta a}$ = 2 % of the material sample of the channels FUS under the load of tensile stresses from 5 to 30 N/mm² was obtained. The results of the study are shown in Figure D 2.1.

Figure D 2.1: Results of the unsteady thermal creep tests

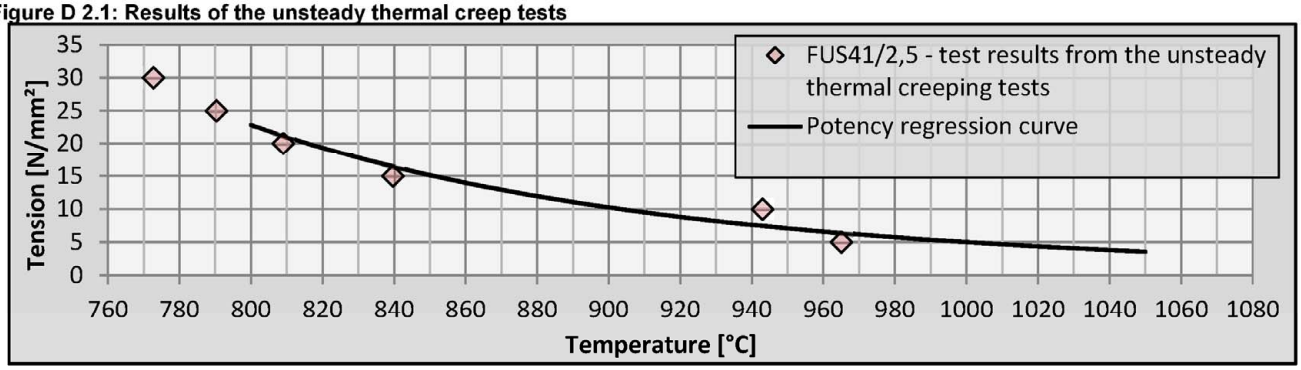

Based on the potency regression curve calculated in Figure D 2.1, Table D 2.1 shows the permissible material stresses in the channel material of the channels FUS to the relevant design temperatures in case of fire.

Table D 2.1: Tensile stresses determined by unsteady creep tests in the channel material at different component temperatures and constant elastic channel elongation with $\varepsilon_{B,\theta a}$ = 2 %

Temperature[3)] [°C]	Tensile stress σ_Z [N/mm²) FUS 41/2,5
800	22,84
842	16,11[2)]
850	15,10
900	10,23
945	7,33[2)]
950	7,08
1000	4,99
1006	4,79[2)]
1049	3,60[2)]
1050	3,57

Table D 2.2: [3)] Temperature after 30, 60, 90 and 120 minutes according to the standard temperature/time curve as per EN 1363-1:2020

Time [min]	30	60	90	120
Temperature [°C]	842	945	1006	1049

[1)] Determined by unsteady thermal creep tests
[2)] Interpolated values of channel material stresses
[3)] Fire chamber temperatures according to standard temperature/time curve acc. to EN 1363-1:2020

fischer channel FUS 21/1,5, FUS 21/2,0, FUS 21/2,5, FUS 41/1,5, FUS 41/2,0, FUS 41/2,5, FUS 62/2,5, FUS 21D/2,0, FUS 41D/2,5 and FUS 62D/2,5	Annex D 2
Tensile stress behavior of the channels FUS at variable component temperature and constant channel deformation with $\varepsilon_{B,\theta a}$ = 2 %	

Electronic copy of the ETA by DIBt: ETA-21/0140

Legend of the coefficients of tables D 4 to D 9

The stress-strain dependencies required for the FEM simulation for temperatures from 800 °C to 1050 °C can be derived from the test results of Annex D 2. Table D3 describes the evaluation parameters. Tables D 4 to D 9 list the resulting strains of channels FUS under the thermal load of the standard temperature/time curve and the mechanical bending stress of 5 to 20 N/mm².

Table D 3.1: Designations of the coefficients of tables D 4 to D 9

Coefficient	Unit	Designation
$\varepsilon_{B,\theta a}$	[mm]	Bending strain of channel at elevated temperature θa
σ_B	[N/mm²]	Bending Stress channel
V	[ ]	Torque-fullness level With regard to the type of stress, the cases - triangular torque curve (MD) - trapezoidal torque curve (MT) - parabolic torque curve (MP) are differentiated. The stress types MD, MT and MP each generate different fullness of the torque line. The basis is a torque line with a constant value that has the fullness VB = 1 and cuts the maximum value of the torque curve MD, MT or MP. For MD and MP, this results in the values - V_{MD} = 1/2 and - V_{MP} = 2/3 In the case of a trapezoidal moment MT, the fullness depends on the span width and results from - V_{MT} = 1- 1/x [-] - x = L/a [-] • a = 0,1m • L = span The fullness that results for the spans is shown in the following table.

L	[m]	0,30	0,50	0,70	0,90	1,10	1,30
x	[-]	3	5	7	9	11	13
V_{MT}	[-]	2/3	4/5	6/7	8/9	10/11	12/13

	[N]	Load
$\delta_{tmax;B}$	[mm]	Deformation of the channel at the time of stability failure or flow joint formation
$t_{tmax;B}$	[min]	Time of the stability failure or fluid joint formation of the channel
δ_{30}	[mm]	Deformation at R30 according to EN 1363-1:2020
δ_{60}	[mm]	Deformation at R60 according to EN 1363-1:2020
δ_{90}	[mm]	Deformation at R90 according to EN 1363-1:2020
δ_{120}	[mm]	Deformation at R120 according to EN 1363-1:2020

fischer channel FUS 21/1,5, FUS 21/2,0, FUS 21/2,5, FUS 41/1,5, FUS 41/2,0, FUS 41/2,5, FUS 62/2,5, FUS 21D/2,0, FUS 41D/2,5 and FUS 62D/2,5	Annex D 3
Legend of the coefficients of tables D 4 to D 9	

Electronic copy of the ETA by DIBt: ETA-21/0140

Table D 4.1: Calculated deformations under fire exposure for channel FUS 41/2.5

System [Dimension in mm]	Load direction	σ_B [N/mm²]	V[1)] [ ]	F[2)] [N]	$\delta_{tmax;B}$ [mm]	$t_{tmax;B}$ [min]	δ_{30} [mm]	δ_{60} [mm]	δ_{90} [mm]	δ_{120} [mm]
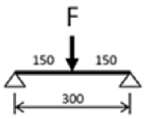	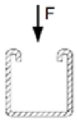	5	$\frac{1}{2}$	190,13	10,48	120	10,48	10,48	10,48	10,48
		10		383,86	12,14	65,00	12,14	12,14	-	-
		15		577,59	8,71	21,67	-	-	-	-
		20		771,32	8,38	20,01	-	-	-	-
		25		965,05	7,74	18,34	-	-	-	-
		30		1158,78	7,50	16,67	-	-	-	-
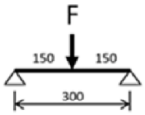	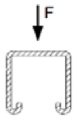	5		190,13	10,48	120	10,48	10,48	10,48	10,48
		10		383,86	12,14	65,00	12,14	12,14	-	-
		15		577,59	8,71	21,67	-	-	-	-
		20		771,32	8,38	20,01	-	-	-	-
		25		965,05	7,74	18,34	-	-	-	-
		30		1158,78	7,50	16,67	-	-	-	-
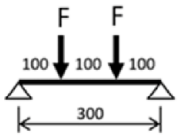	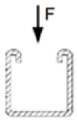	5	$\frac{2}{3}$	142,60	10,28	120	10,28	10,28	10,28	10,28
		10		287,89	11,33	120	11,33	11,33	11,33	11,33
		15		433,19	18,91	120	12,76	12,76	14,45	18,91
		20		578,49	34,66	106,67	15,57	23,05	29,35	-
		25		723,79	38,35	55,00	21,96	-	-	-
		30		869,09	39,64	21,67	33,28	-	-	-
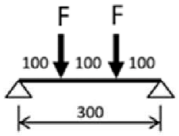	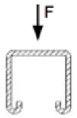	5		142,60	10,29	120	10,29	10,29	10,29	10,29
		10		287,89	11,38	120	11,38	11,38	11,38	11,38
		15		433,19	21,35	120	12,87	13,43	15,88	21,35
		20		578,49	45,38	105,00	15,85	26,18	34,69	45,38
		25		723,79	46,26	58,33	-	-	-	-
		30		869,09	39,59	30	-	-	-	-

[1)] Moment fullness without share from channel own weight
[2)] Size of each individual load of the designated system

fischer channel FUS 21/1,5, FUS 21/2,0, FUS 21/2,5, FUS 41/1,5, FUS 41/2,0, FUS 41/2,5, FUS 62/2,5, FUS 21D/2,0, FUS 41D/2,5 and FUS 62D/2,5	Annex D 4
Deflections channel FUS 41/2.5 under fire exposure clamping range = 300mm	

Electronic copy of the ETA by DIBt: ETA-21/0140

Table D 5.1: Calculated deformations under fire exposure for channel FUS 41/2.5

System [Dimension in mm]	Load direction	σ_B [N/mm²]	V[1] [ ]	F[2] [N]	$\delta_{tmax;B}$ [mm]	$t_{tmax;B}$ [min]	δ_{30} [mm]	δ_{60} [mm]	δ_{90} [mm]	δ_{120} [mm]
	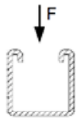	5	$\frac{1}{2}$	110,23	10,87	120	10,87	10,87	10,87	10,87
		10		226,47	18,14	120	13,30	13,77	15,39	18,14
		15		342,71	30,46	90	16,47	22,96	30,46	-
		20		458,95	19,29	28,34	-	-	-	-
		25		575,19	12,34	21,67	-	-	-	-
		30		691,42	10,85	20,01	-	-	-	-
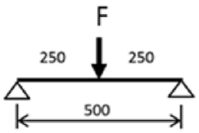	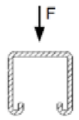	5		110,23	10,70	120,0	10,70	10,70	10,70	10,70
		10		226,47	16,47	120	12,82	12,82	14,03	16,47
		15		342,71	33,00	120	15,41	20,80	25,94	33,00
		20		458,95	67,37	120	19,86	38,37	51,77	67,37
		25		575,19	82,85	85,00	28,69	66,28		
		30		691,42	84,15	45,00	46,03			
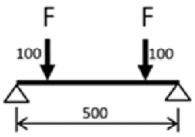	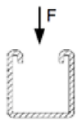	5	$\frac{2}{3}$	137,79	11,39	120	11,39	11,39	11,39	11,39
		10		283,09	24,51	120	14,63	16,68	19,65	24,51
		15		428,39	72,54	93,33	19,25	37,94	68,05	-
		20		573,68	77,26	43,33	29,91	-	-	-
		25		718,98	36,44	26,67	-	-	-	-
		30		864,28	17,63	21,67	-	-	-	-
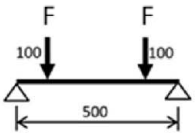	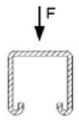	5		137,79	11,37	120	11,37	11,37	11,37	11,37
		10		283,09	24,82	120	14,63	16,81	19,85	24,82
		15		428,39	55,69	120	19,27	35,13	45,01	55,69
		20		573,68	86,73	120	29,21	60,53	74,21	86,73
		25		718,98	106,45	120	50,24	82,06	94,32	106,45
		30		864,28	120,19	120	70,57	98,09	109,29	120,19
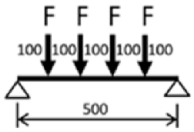	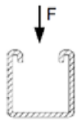	5	$\frac{4}{5}$	45,93	11,08	120	11,08	11,08	11,08	11,08
		10		94,36	21,45	120	13,87	15,11	17,47	21,45
		15		142,80	49,47	120	17,50	28,90	38,08	49,47
		20		191,23	90,78	120	24,96	54,45	71,74	90,78
		25		239,66	106,36	90	41,95	83,72	106,36	-
		30		288,09	106,19	56,67	66,85	-	-	-
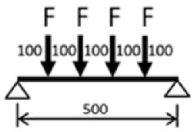	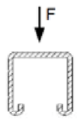	5		45,93	11,09	120	11,09	11,09	11,09	11,09
		10		94,36	21,55	120	13,91	15,22	17,58	21,55
		15		142,80	48,34	120	17,59	29,14	37,86	48,34
		20		191,23	84,33	120	25,10	54,14	69,21	84,33
		25		239,66	110,12	118,33	42,06	81,55	96,84	-
		30		288,09	104,60	63,33	66,01	102,62	-	-

[1] Moment fullness without share from channel own weight
[2] Size of each individual load of the designated system

fischer channel FUS 21/1,5, FUS 21/2,0, FUS 21/2,5, FUS 41/1,5, FUS 41/2,0, FUS 41/2,5, FUS 62/2,5, FUS 21D/2,0, FUS 41D/2,5 and FUS 62D/2,5	Annex D 5
Deflections channel FUS 41/2.5 under fire exposure clamping range = 500mm	

Electronic copy of the ETA by DIBt: ETA-21/0140

Table D 6.1: Calculated deformations under fire exposure for channel FUS 41/2.5

System [Dimension in mm]	Load direction	σ_B [N/mm²]	V[1)] [ ]	F[2)] [N]	$\delta_{tmax;B}$ [mm]	$t_{tmax;B}$ [min]	δ_{30} [mm]	δ_{60} [mm]	δ_{90} [mm]	δ_{120} [mm]
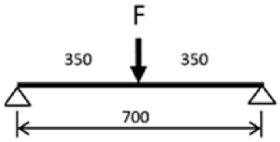	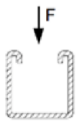	5	$\frac{1}{2}$	74,62	13,73	120	11,68	12,33	13,30	13,73
		10		157,65	33,14	120	15,97	22,63	28,05	33,14
		15		240,67	105,70	120	21,28	42,51	66,71	105,70
		20		323,70	173,60	111,67	30,47	110,30	153,86	-
		25		406,73	162,07	56,67	54,74	-	-	-
		30		489,76	63,13	26,67	-	-	-	-
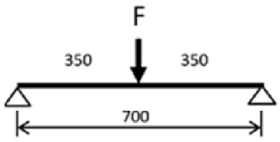	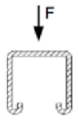	5		74,62	13,33	120	11,57	12,08	12,95	13,33
		10		157,65	31,56	120	15,66	21,89	26,87	31,56
		15		240,67	61,24	120	20,60	37,19	48,85	61,24
		20		323,70	111,79	120	29,19	67,71	89,96	111,79
		25		406,73	146,22	106,67	46,06	106,72	132,78	
		30		489,76	139,13	56,67	75,13			
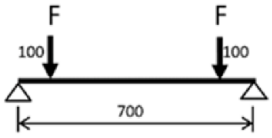	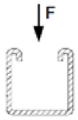	5	$\frac{2}{3}$	130,58	19,04	120	12,98	15,96	18,32	19,04
		10		275,88	55,29	120	19,50	30,21	39,55	55,29
		15		421,18	95,05	68,33	28,92	87,61	-	-
		20		566,48	50,73	28,34	-	-	-	-
		25		711,77	35,99	23,34	-	-	-	-
		30		857,07	30,56	21,67	-	-	-	-
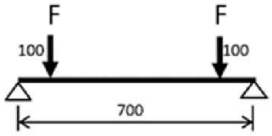	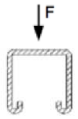	5		130,58	19,10	120	12,95	16,00	18,41	19,10
		10		275,88	47,67	120	19,48	30,29	38,48	47,67
		15		421,18	86,91	120	28,67	60,26	74,47	86,91
		20		566,48	121,67	120	47,28	92,29	108,50	121,67
		25		711,77	143,69	120	75,87	114,46	130,90	143,69
		30		857,07	158,93	120	99,09	130,79	146,63	158,93
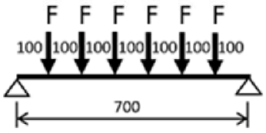	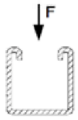	5	$\frac{6}{7}$	21,76	16,56	120	12,33	14,27	16,02	16,56
		10		45,98	40,75	120	17,74	26,49	33,37	40,75
		15		70,20	82,26	120	24,73	50,56	66,45	82,26
		20		94,41	132,59	120	38,72	86,59	110,07	132,59
		25		118,63	171,55	120	66,18	119,73	146,33	171,55
		30		142,85	179,83	93,33	96,76	148,64	177,97	-
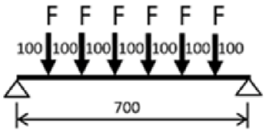	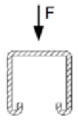	5		21,76	16,72	120	12,35	14,39	16,17	16,72
		10		45,98	40,94	120	17,79	26,67	33,58	40,94
		15		70,20	81,02	120	24,83	51,14	66,35	81,02
		20		94,41	125,93	120	38,92	86,86	107,70	125,93
		25		118,63	156,62	120	66,34	117,85	138,15	156,62
		30		142,85	179,59	120	96,32	142,88	162,65	179,59

[1)] Moment fullness without share from channel own weight
[2)] Size of each individual load of the designated system

fischer channel FUS 21/1,5, FUS 21/2,0, FUS 21/2,5, FUS 41/1,5, FUS 41/2,0, FUS 41/2,5, FUS 62/2,5, FUS 21D/2,0, FUS 41D/2,5 and FUS 62D/2,5	Annex D 6
Deflections channel FUS 41/2.5 under fire exposure clamping range = 700mm	

Electronic copy of the ETA by DIBt: ETA-21/0140

Table D 7.1: Calculated deformations under fire exposure for channel FUS 41/2.5

System [Dimension in mm]	Load direction	σ_B [N/mm²]	V[1)] [ ]	F[2)] [N]	$\delta_{tmax;B}$ [mm]	$t_{tmax;B}$ [min]	δ_{30} [mm]	δ_{60} [mm]	δ_{90} [mm]	δ_{120} [mm]
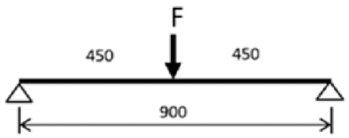	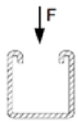	5	$\frac{1}{2}$	53,76	22,63	120	12,88	18,51	21,94	22,63
		10		118,34	56,10	120	19,79	35,43	46,95	56,10
		15		182,92	159,36	120	28,34	68,97	107,90	159,36
		20		247,50	245,71	120	44,57	164,16	214,26	245,71
		25		312,07	290,37	120	95,59	225,88	264,43	290,37
		30		376,65	286,63	80	186	261,47	-	-
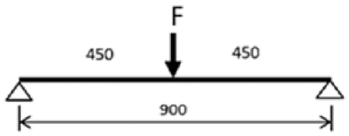	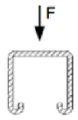	5		53,76	22,15	120	12,79	18,25	21,53	22,15
		10		118,34	51,61	120	19,54	34,21	44,00	51,61
		15		182,92	95,30	120	27,64	58,44	77,53	95,30
		20		247,50	159,26	120	41,67	102,14	132,37	159,26
		25		312,07	209,95	120	68,19	149,65	182,19	209,95
		30		376,65	207,36	73,33	108,29	191,66	-	-
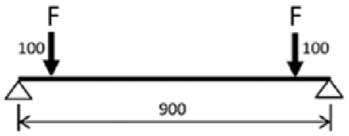	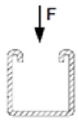	5	$\frac{2}{3}$	120,97	31,22	120	15,01	24,42	30,03	31,22
		10		266,27	103,10	120	25,89	50,53	81,11	103,10
		15		411,57	71,95	33,33	43,39	-	-	-
		20		556,87	40,90	25,00	-	-	-	-
		25		702,16	30,88	21,67	-	-	-	-
		30		847,46	26,86	20,01	-	-	-	-
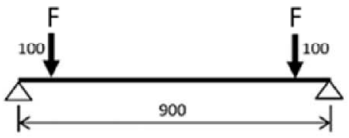	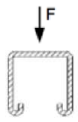	5		120,97	31,11	120	14,98	24,44	30,04	31,11
		10		266,27	74,88	120	25,84	47,45	61,57	74,88
		15		411,57	118,68	120	40,69	86,07	103,97	118,68
		20		556,87	156,94	120	68,24	123,12	142,17	156,94
		25		702,16	181,85	120	100,95	148,25	167,48	181,85
		30		847,46	199,05	120	127,03	166,48	185,44	199,05
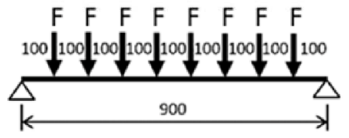	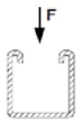	5	$\frac{8}{9}$	12,10	27,32	120	14,06	21,78	26,40	27,32
		10		26,63	65,15	120	22,95	41,42	53,87	65,15
		15		41,16	116,06	120	34,34	75,61	97,12	116,06
		20		55,69	172,48	120	56,23	119,78	148,03	172,48
		25		70,22	213,45	120	92,12	155,40	186,23	213,45
		30		84,75	245,12	120	127,45	186,07	217,69	245,12
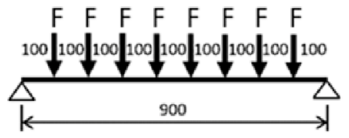	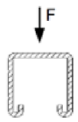	5		12,10	27,64	120	14,10	22,01	26,72	27,64
		10		26,63	65,70	120	23,03	41,82	54,37	65,70
		15		41,16	115,55	120	34,54	77,00	97,80	115,55
		20		55,69	166,94	120	56,69	121,07	146,37	166,94
		25		70,22	202,89	120	93,13	154,90	181,12	202,89
		30		84,75	229,48	120	128,07	182,55	207,76	229,48

[1)] Moment fullness without share from channel own weight
[2)] Size of each individual load of the designated system

fischer channel FUS 21/1,5, FUS 21/2,0, FUS 21/2,5, FUS 41/1,5, FUS 41/2,0, FUS 41/2,5, FUS 62/2,5, FUS 21D/2,0, FUS 41D/2,5 and FUS 62D/2,5	Annex D 7
Deflections channel FUS 41/2.5 under fire exposure clamping range = 900mm	

Electronic copy of the ETA by DIBt: ETA-21/0140

Table D 8.1: Calculated deformations under fire exposure for channel FUS 41/2.5

System [Dimension in mm]	Load direction	σ_B [N/mm²]	V[1)] [ ]	F[2)] [N]	$\delta_{tmax;B}$ [mm]	$t_{tmax;B}$ [min]	δ_{30} [mm]	δ_{60} [mm]	δ_{90} [mm]	δ_{120} [mm]
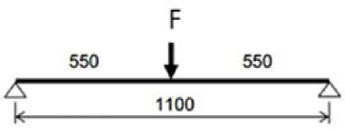	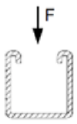	5	$\frac{1}{2}$	39,62	34,55	120	14,48	26,67	33,46	34,55
		10		92,46	82,54	120	24,77	51,95	69,45	82,54
		15		145,29	222,71	120	37,82	99,02	165,53	222,71
		20		198,13	310,37	120	63,97	222,10	276,07	310,37
		25		250,96	360,36	120	139,91	288,18	332,44	360,36
		30		303,80	392,35	120	239,31	327,60	366,93	392,35
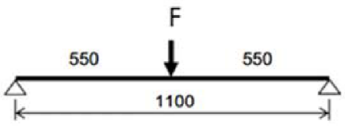	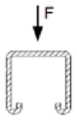	5		39,62	33,51	120	14,40	26,23	32,57	33,51
		10		92,46	76,39	120	24,50	49,68	65,31	76,39
		15		145,29	133,48	120	36,55	83,89	110,62	133,48
		20		198,13	208,73	120	57,23	139,90	177,38	208,73
		25		250,96	266,78	120	94,18	194,53	233,88	266,78
		30		303,80	289,87	96,67	144,02	242,68	282,28	-
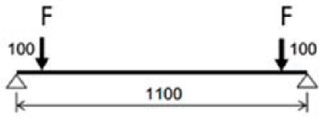	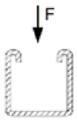	5	$\frac{2}{3}$	108,96	46,75	120	17,44	34,77	44,70	46,75
		10		254,26	134,71	120	33,82	85,50	116,11	134,71
		15		399,55	68,68	30,00	68,66	-	-	-
		20		544,85	50,43	23,34	-	-	-	-
		25		690,15	49,33	21,67	-	-	-	-
		30		835,45	40,84	20,01	-	-	-	-
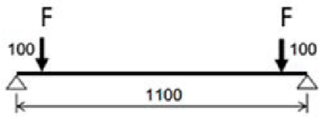	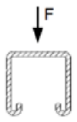	5		108,96	45,35	120	17,37	34,55	43,87	45,35
		10		254,26	104,73	120	33,59	67,60	87,91	104,73
		15		399,55	152,50	120	54,87	112,55	134,66	152,50
		20		544,85	193,62	120	91,02	154,28	176,61	193,62
		25		690,15	221,52	120	126,55	182,52	205,12	221,52
		30		835,45	241,25	120	155,18	203,12	225,48	241,25
	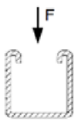	5	$\frac{10}{11}$	7,26	40,78	120	16,29	31,24	39,39	40,78
		10		16,95	93,46	120	29,52	59,62	78,24	93,46
		15		26,64	151,10	120	46,30	102,62	129,07	151,10
		20		36,32	211,11	120	76,68	152,91	185,06	211,11
		25		46,01	255,14	120	118,94	191,66	226,32	255,14
		30		55,70	289,18	120	158,29	223,10	258,78	289,18
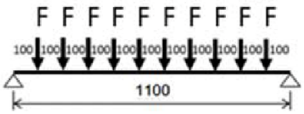	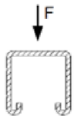	5		7,26	41,43	120	16,36	31,67	40,02	41,43
		10		16,95	94,65	120	29,67	60,41	79,28	94,65
		15		26,64	151,21	120	46,68	104,93	130,49	151,21
		20		36,32	207,19	120	77,61	155,15	184,26	207,19
		25		46,01	247,77	120	120,77	192,68	223,69	247,77
		30		55,70	278,37	120	159,77	222,23	253,55	278,37

[1)] Moment fullness without share from channel own weight
[2)] Size of each individual load of the designated system

fischer channel FUS 21/1,5, FUS 21/2,0, FUS 21/2,5, FUS 41/1,5, FUS 41/2,0, FUS 41/2,5, FUS 62/2,5, FUS 21D/2,0, FUS 41D/2,5 and FUS 62D/2,5	Annex D 8
Deflections channel FUS 41/2.5 under fire exposure clamping range = 1100mm	

Electronic copy of the ETA by DIBt: ETA-21/0140

Table D 9.1: Calculated deformations under fire exposure for channel FUS 41/2.5

System [Dimension in mm]	Load direction	σ_B [N/mm²]	V[1)] [ ]	F[2)] [N]	$\delta_{tmax;B}$ [mm]	$t_{tmax;B}$ [min]	δ_{30} [mm]	δ_{60} [mm]	δ_{90} [mm]	δ_{120} [mm]
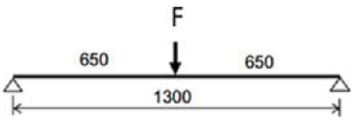	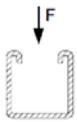	5	$\frac{1}{2}$	29,09	49,27	120	16,54	37,01	47,69	49,27
		10		73,80	112,24	120	31,03	71,01	95,04	112,24
		15		118,50	281,45	120	49,99	135,34	224,25	281,45
		20		163,21	373,04	120	84,78	277,19	337,09	373,04
		25		207,92	426,65	120	193,51	347,44	396,13	426,65
		30		252,63	461,93	120	293,03	389,57	433,91	461,93
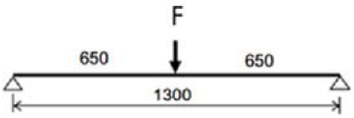	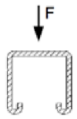	5		29,09	47,57	120	16,46	36,15	46,24	47,57
		10		73,80	105,56	120	30,61	68,30	90,60	105,56
		15		118,50	174,74	120	47,38	112,84	147,10	174,74
		20		163,21	242,50	120	81,46	170,53	210,30	242,50
		25		207,92	325,44	120	123,16	241,14	287,67	325,44
		30		252,63	376,20	120	181,59	294,93	340,63	376,20
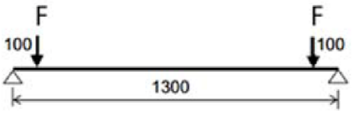	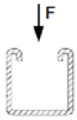	5	$\frac{2}{3}$	94,54	67,19	120	20,17	47,36	63,73	67,19
		10		239,84	178,27	120	43,44	122,50	157,15	178,27
		15		385,14	72,95	28,34	-	-	-	-
		20		530,44	41,84	21,67	-	-	-	-
		25		675,73	36,38	20,01	-	-	-	-
		30		821,03	26,66	18,34	-	-	-	-
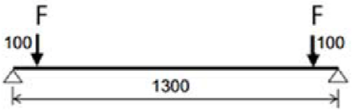	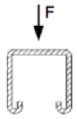	5		94,54	61,37	120	20,03	46,06	59,44	61,37
		10		239,84	136,22	120	42,57	90,05	116,48	136,22
		15		385,14	189,01	120	70,78	139,82	166,72	189,01
		20		530,44	231,53	120	114,92	186,12	212,10	231,53
		25		675,73	263,14	120	153,12	217,82	244,26	263,14
		30		821,03	285,34	120	184,31	241,04	267,45	285,34
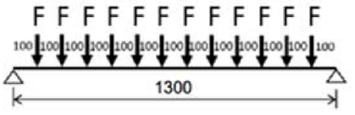	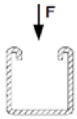	5	$\frac{12}{13}$	4,50	56,96	120	19,08	42,71	54,98	56,96
		10		11,42	124,54	120	37,50	80,67	105,69	124,54
		15		18,34	186,95	120	60,49	130,63	161,92	186,95
		20		25,26	248,50	120	99,38	185,66	220,88	248,50
		25		32,18	295,97	120	146,21	227,46	265,49	295,97
		30		39,10	332,98	120	188,74	260,37	300,51	332,98
	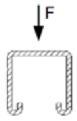	5		4,50	58,13	120	19,22	43,47	56,10	58,13
		10		11,42	126,57	120	37,77	82,06	107,47	126,57
		15		18,34	187,66	120	61,17	133,88	163,99	187,66
		20		25,26	246,81	120	100,98	188,84	221,59	246,81
		25		32,18	291,39	120	148,79	230,08	264,99	291,39
		30		39,10	325,74	120	190,94	262,17	298,50	325,74

[1)] Moment fullness without share from channel own weight
[2)] Size of each individual load of the designated system

fischer channel FUS 21/1,5, FUS 21/2,0, FUS 21/2,5, FUS 41/1,5, FUS 41/2,0, FUS 41/2,5, FUS 62/2,5, FUS 21D/2,0, FUS 41D/2,5 and FUS 62D/2,5	Annex D 9
Deflections channel FUS 41/2.5 under fire exposure clamping range = 1300mm	

Electronic copy of the ETA by DIBt: ETA-21/0140

Tables D 10.1 to D 10.4 show the main installation conditions of the channels FUS for fire-resistant systems under the fire load of the standard temperature/time curve according to EN 1363 1:2020. Tables D 10.1 to D 10.4 also list all necessary components of the system. Here, the system with a centrally mounted pipe clamp is always considered.

Table D 10.1: Main installation states of the channels FUS for fire-resistant systems

System No.	System designation	System visualization	Channel FUS	Washer HK	Threaded nut MU	Washer U	Pipe clamp FRS or FRS-L	Sliding nut e.g. FCN Clix P	Anchor e.g. FAZ II	Threaded rod G
1	Directly mounted directly through back perforation	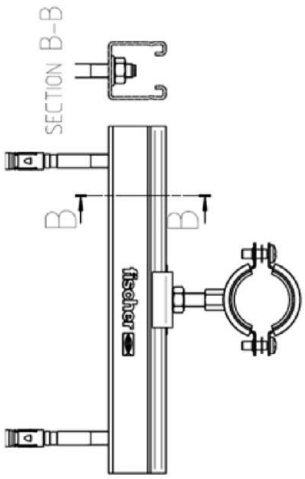	1	1	1	2 (partly included in the anchor)	1	1	2	1
2	Directly mounted with washer HK	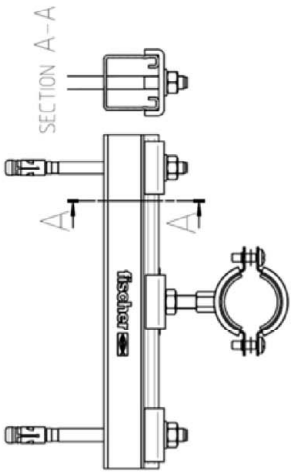	1	3	1	-	1	1	2	1

fischer channel FUS 21/1,5, FUS 21/2,0, FUS 21/2,5, FUS 41/1,5, FUS 41/2,0, FUS 41/2,5, FUS 62/2,5, FUS 21D/2,0, FUS 41D/2,5 and FUS 62D/2,5	Annex D 10 (informative)
Main installation conditions of the channels FUS for fire-resistant systems under the load of the standard temperature /time curve according to EN 1363-1:2020	

Electronic copy of the ETA by DIBt: ETA-21/0140

Table D 11.1: Main installation states of the channels FUS for fire-resistant systems

System No.	System designation	System visualization	Channel FUS	Washer HK	Threaded nut MU	Washer U	Pipe clamp FRS or FRS-L	Sliding nut e.g. FCN Clix P	Anchor e.g. EA II	Threaded rod G
3	Suspended with threaded rod, Pipe clamp elevated to the top	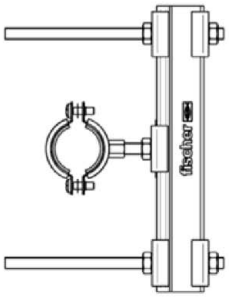	1	4	5	-	1	1	2	3
4	Suspended with threaded rod, Pipe clamp suspended downwards	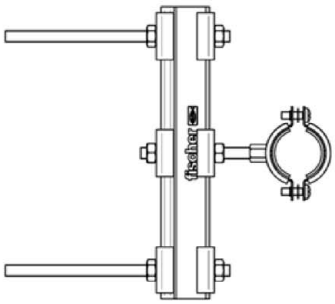	1	6	6	-	1	-	2	3

fischer channel FUS 21/1,5, FUS 21/2,0, FUS 21/2,5, FUS 41/1,5, FUS 41/2,0, FUS 41/2,5, FUS 62/2,5, FUS 21D/2,0, FUS 41D/2,5 and FUS 62D/2,5	Annex D 11 (informative)
Main installation conditions of the channels FUS for fire-resistant systems under the load of the standard temperature /time curve according to EN 1363-1:2020	

Electronic copy of the ETA by DIBt: ETA-21/0140

Table D 12.1: Main installation states of the channels FUS for fire-resistant systems

System No.	System designation	System visualization	Channel FUS	Saddle flange SF L	Universal angle UWS	Washer HK	Hexagon head screw SKS	Washer U	Pipe clamp FRS	Sliding nut e.g. FCN Clix P	Anchor e.g. FAZ II	Threaded rod G
5	Suspended with channels, Pipe clamp elevated to the top	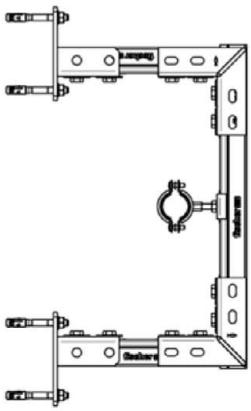	3	2	2	1	12	-	1	13	4	1
6	Suspended with channels, Pipe clamp suspended downwards	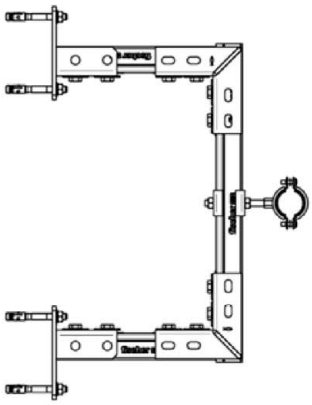	3	2	2	2	12	-	1	12	4	1

fischer channel FUS 21/1,5, FUS 21/2,0, FUS 21/2,5, FUS 41/1,5, FUS 41/2,0, FUS 41/2,5, FUS 62/2,5, FUS 21D/2,0, FUS 41D/2,5 and FUS 62D/2,5	Annex D 12 (informative)
Main installation conditions of the channels FUS for fire-resistant systems under the load of the standard temperature /time curve according to EN 1363-1:2020	

Electronic copy of the ETA by DIBt: ETA-21/0140