Deutsches Institut für Bautechnik DIBt

Member of EOTA
www.eota.eu

Approval body for construction products and types of construction

Bautechnisches Prüfamt

An institution established by the Federal and Laender Governments

Designated according to Article 29 of Regulation (EU) No 305/2011 and member of EOTA (European Organisation for Technical Assessment)

European Technical Assessment

ETA-22/0503 of 21 October 2022

English translation prepared by DIBt - Original version in German language

General Part

Technical Assessment Body issuing the European Technical Assessment:	Deutsches Institut für Bautechnik
Trade name of the construction product	Injection mortar FAKKT IM Z for masonry
Product family to which the construction product belongs	Metal Injection anchors for use in masonry
Manufacturer	Keller & Kalmbach GmbH Siemensstraße 19 85716 Unterschleißheim DEUTSCHLAND
Manufacturing plant	Werk Keller & Kalmbach
This European Technical Assessment contains	49 pages including 3 annexes which form an integral part of this assessment
This European Technical Assessment is issued in accordance with Regulation (EU) No 305/2011, on the basis of	EAD 330076-00-0604, Edition 11/2017

Electronic copy of the ETA by DIBt: ETA-22/0503

The European Technical Assessment is issued by the Technical Assessment Body in its official language. Translations of this European Technical Assessment in other languages shall fully correspond to the original issued document and shall be identified as such.

Communication of this European Technical Assessment, including transmission by electronic means, shall be in full. However, partial reproduction may only be made with the written consent of the issuing Technical Assessment Body. Any partial reproduction shall be identified as such.

This European Technical Assessment may be withdrawn by the issuing Technical Assessment Body, in particular pursuant to information by the Commission in accordance with Article 25(3) of Regulation (EU) No 305/2011.

Electronic copy of the ETA by DIBt: ETA-22/0503

Specific Part

1 Technical description of the product

The Injection mortar FAKKT IM Z for masonry is a bonded anchor (injection type) consisting of a mortar cartridge with injection mortar FAKKT IM Z, a perforated sleeve FAKKT IM SH K and a FAKKT anchor rod with hexagon nut and washer or an FAKKT internal threaded sleeve. The steel elements are made of zinc coated steel, stainless steel or high corrosion resistant steel.

The anchor rod is placed into a drilled hole filled with injection mortar and is anchored via the bond between steel element, injection mortar and masonry and mechanical interlock.

The product description is given in Annex A.

2 Specification of the intended use in accordance with the applicable European Assessment Document

The performances given in Section 3 are only valid if the fastener is used in compliance with the specifications and conditions given in Annex B.

The verifications and assessment methods on which this European Technical Assessment is based lead to the assumption of a working life of the fastener of at least 50 years. The indications given on the working life cannot be interpreted as a guarantee given by the producer, but are to be regarded only as a means for choosing the right products in relation to the expected economically reasonable working life of the works.

3 Performance of the product and references to the methods used for its assessment

3.1 Mechanical resistance and stability (BWR 1)

Essential characteristic	Performance
Characteristic values for resistance	See Annexes B 13, C 1 to C 27
Displacements	See Annex C 27
Durability	See annex B 2

3.2 Safety in case of fire (BWR 2)

Essential characteristic	Performance
Reaction to fire	Class A1

3.3 Hygiene, health and the environment (BWR 3)

Essential characteristic	Performance
Content, emission and/or release of dangerous substances	No performance assessed

4 Assessment and verification of constancy of performance (AVCP) system applied, with reference to its legal base

In accordance with the European Assessment Document EAD 330076-00-0604 the applicable European legal act is: [97/177/EC].

The system to be applied is: 1

Electronic copy of the ETA by DIBt: ETA-22/0503

5 Technical details necessary for the implementation of the AVCP system, as provided for in the applicable European Assessment Document

Technical details necessary for the implementation of the AVCP system are laid down in the control plan deposited at Deutsches Institut für Bautechnik.

Issued in Berlin on 21 October 2022 by Deutsches Institut für Bautechnik

Dipl.-Ing. Beatrix Wittstock
Head of Section

beglaubigt:
Baderschneider

Electronic copy of the ETA by DIBt: ETA-22/0503

Installation conditions part 1

Anchor rods with perforated sleeve FAKKT IM SH K; Installation in perforated and solid brick masonry

Pre-positioned anchorage:

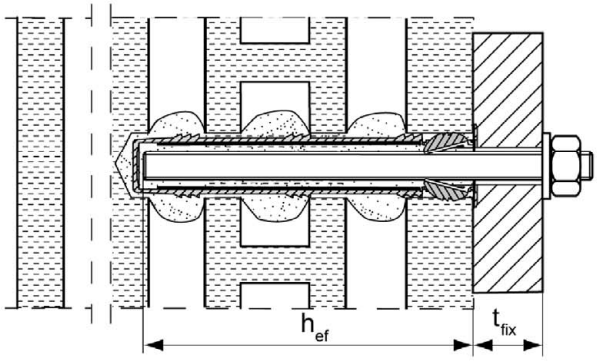

Installation with render bridge

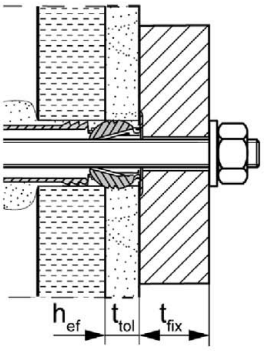

Size of the perforated sleeve:			
	FAKKT IM SH 12x85 K	FAKKT IM SH 16x130 K	FAKKT IM SH 20x130 K
	FAKKT IM SH 16x85 K	FAKKT IM SH 20x85 K	FAKKT IM SH 20x200 K

FAKKT Internal threaded sleeve with perforated sleeve SH K;
Installation in perforated and solid brick masonry

Pre-positioned anchorage:

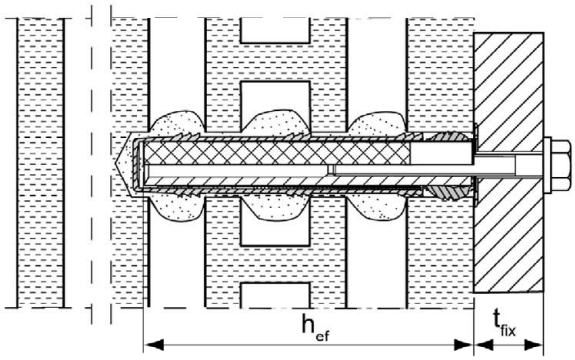

Figures not to scale

h_{ef} = effective anchorage depth

t_{fix} = thickness of fixture

t_{tol} = thickness of unbearing layer (e.g. plaster)

Injection mortar FAKKT IM Z for masonry

Product description
Installation conditions part 1,
Anchor rods and FAKKT internal threaded sleeve with perforated sleeve

Annex A 1

Electronic copy of the ETA by DIBt: ETA-22/0503

Installation conditions part 2

Anchor rods without perforated sleeve FAKKT IM SH K;
installation in solid brick masonry and autoclaved aerated concrete

Pre-positioned anchorage:

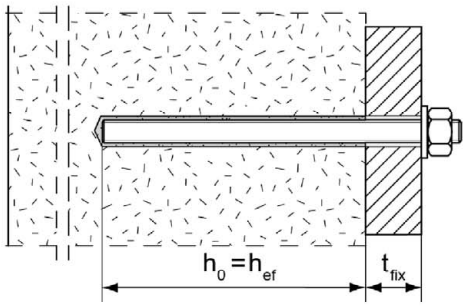

Push through anchorage: Annular gap filled with mortar

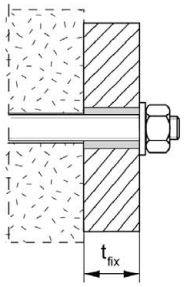

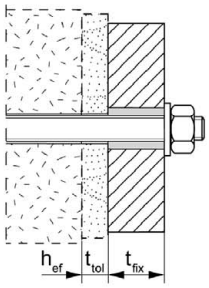

Installation with render bridge

FAKKT Internal threaded sleeve without perforated sleeve FAKKT IM SH K; installation in solid brick masonry and autoclaved aerated concrete

Pre-positioned anchorage:

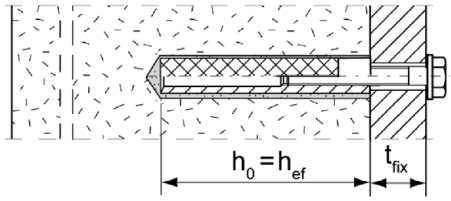

Installation with render bridge

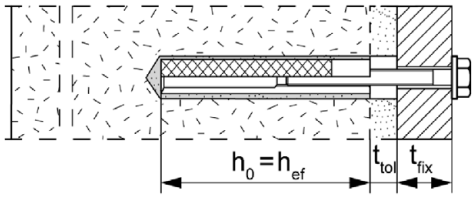

Figures not to scale

h_0 = depth of drill hole
h_{ef} = effective anchorage depth
t_{tol} = thickness of unbearing layer (e.g. plaster)
t_{fix} = thickness of fixture

Injection mortar FAKKT IM Z for masonry

Product description
Installation conditions part 2, Anchor rods and internal threaded sleeve without perforated sleeve

Annex A 2

Electronic copy of the ETA by DIBt: ETA-22/0503

Overview system components part 1

Mortar cartridge (shuttle cartridge) with sealing cap

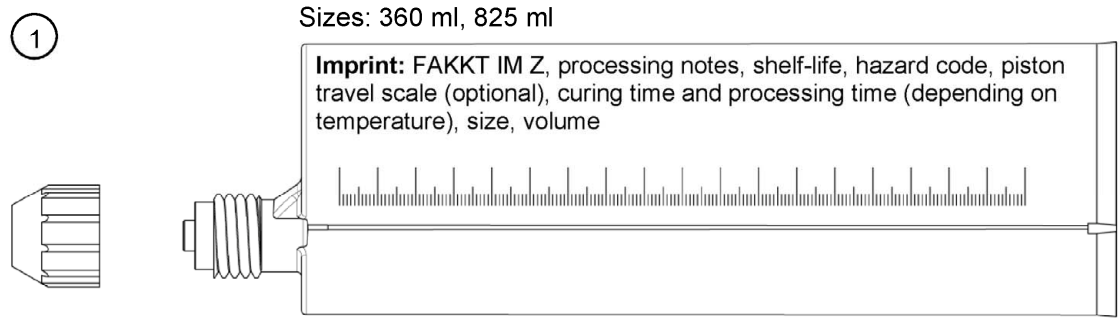

Mortar cartridge (coaxial cartridge) with sealing cap

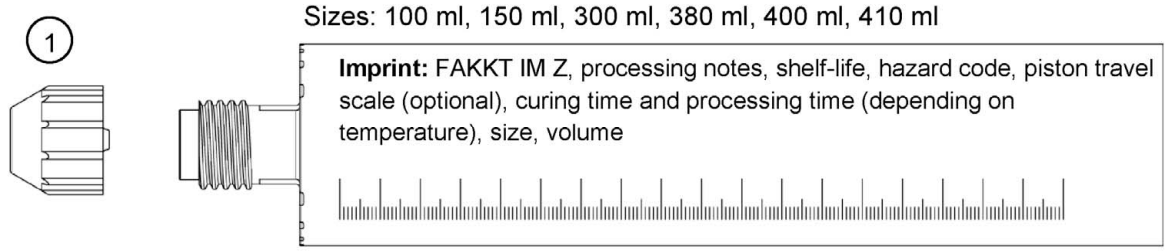

Static mixer FAKKT IM Z 300 & 360 ml for injection cartridges up to 410 ml

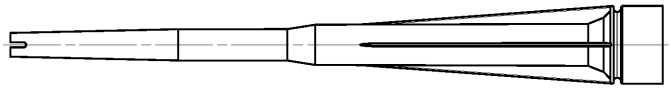

Static mixer FAKKT IM Z 825 ml for injection cartridges 825 ml

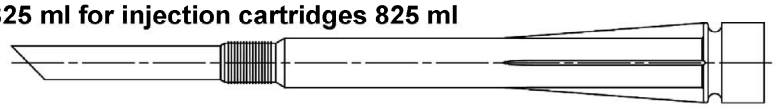

Extension tube Ø 9 for static mixer FAKKT IM Z 300 & 360 ml;
Extension tube Ø 9 or Ø 15 for static mixer FAKKT IM Z 825 ml

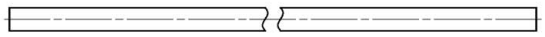

FAKKT Cleaning brush

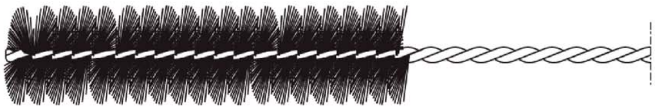

FAKKT Blow-out pump

compressed-air cleaning tool

Injection mortar FAKKT IM Z for masonry

Product description
Overview system components part 1: cartridge / static mixer / cleaning tools

Annex A 3

Electronic copy of the ETA by DIBt: ETA-22/0503

Overview system components part 2

FAKKT anchor rod

(2)

Size: M8, M10, M12

FAKKT Internal threaded sleeve

(5)

Size: 11x85 M6 / M8
15x85 M10 / M12

Perforated sleeve FAKKT IM SH K

(7)

Size: FAKKT IM SH 12x85 K
FAKKT IM SH 16x85 K
FAKKT IM SH 20x85 K

(7)

Size: FAKKT IM SH 16x130 K
FAKKT IM SH 20x130 K
FAKKT IM SH 20x200 K

Washer

(3) 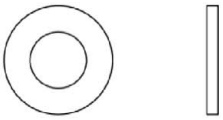

Hexagon nut

(4)

Injection adapter

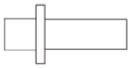

Figures not to scale

Injection mortar FAKKT IM Z for masonry

Product description
Overview system components part 2: steel parts / perforated sleeve

Annex A 4

Electronic copy of the ETA by DIBt: ETA-22/0503

Table A5.1: Materials

Part	Designation	Material		
1	Mortar cartridge	Mortar, hardener; filler		
		Steel zinc plated	Stainless steel R acc. to EN 10088-1:2014 Corrosion resistance class CRC III acc. to EN 1993-1-4:2006+A1:2015	High corrosion-resistant steel HCR acc. to EN 10088-1:2014 Corrosion resistance class CRC V acc. to EN 1993-1-4:2006+A1:2015
2	Anchor rod	Property class 4.8; 5.8 or 8.8; EN ISO 898-1: 2013 zinc plated ≥ 5µm, EN ISO 4042:2018Zn5/An(A2K) or hot-dip galvanised EN ISO 10684: 2004+AC:2009 f_{uk} ≤ 1000 N/mm² A_5 > 8% fracture elongation	Property class 50, 70 or 80; EN ISO 3506-1:2020 1.4401; 1.4404; 1.4578; 1.4571; 1.4439; 1.4362; 1.4062; 1.4662; 1.4462; EN 10088-1:2014 f_{uk} ≤ 1000 N/mm² A_5 > 8% fracture elongation	Property class 50 or 80; EN ISO 3506-1:2020 or property class 70 with f_{yk}= 560 N/mm² 1.4565; 1.4529 EN 10088-1:2014 f_{uk} ≤ 1000 N/mm² A_5 > 8% fracture elongation
3	Washer ISO 7089:2000	zinc plated ≥ 5µm, EN ISO 4042:2018 Zn5/An(A2K) or hot-dip galvanised EN ISO 10684:2004+AC:2009	1.4401; 1.4404; 1.4578; 1.4571; 1.4439; 1.4362; EN 10088-1:2014	1.4565;1.4529 EN 10088-1:2014
4	Hexagon nut	Property class 5 or 8 EN ISO 898-2:2012 zinc plated ≥ 5µm, EN ISO 4042:2018 Zn5/An(A2K) or hot-dip galvanised EN ISO 10684:2004+AC:2009	Property class 50, 70 or 80; EN ISO 3506-2:2020 1.4401; 1.4404; 1.4578; 1.4571; 1.4439; 1.4362; EN 10088-1:2014	Property class 50, 70 or 80; EN ISO 3506-2:2020 1.4565; 1.4529 EN 10088-1:2014
5	FAKKT Internal threaded sleeve	Property class 5.8; EN 10277-1:2018 zinc plated ≥ 5µm, EN ISO 4042:2018Zn5/An(A2K)	Property class 70; EN ISO 3506-1:2020 1.4401; 1.4404; 1.4578; 1.4571; 1.4439; 1.4362; EN 10088-1:2014	Property class 70 EN ISO 3506-1:2020 1.4565; 1.4529 EN 10088-1:2014
6	Commercial standard screw or threaded rod for FAKKT Internal threaded sleeve	Property class 5.8 or 8.8; EN ISO 898-1:2013 zinc plated ≥ 5µm, EN ISO 4042:2018Zn5/An(A2K)	Property class 70; EN ISO 3506-1:2020 1.4401; 1.4404; 1.4578; 1.4571; 1.4439; 1.4362; EN 10088-1:2014	Property class 70; EN ISO 3506-1:2020 1.4565; 1.4529 EN 10088-1:2014
7	Perforated sleeve FAKKT IM SH K	PP / PE		

Injection mortar FAKKT IM Z for masonry

Product description
Materials

Annex A 5

Electronic copy of the ETA by DIBt: ETA-22/0503

Specifications of intended use part 1

Table B1.1: Overview use and performance categories

Anchorages subject to		**FAKKT IM Z for masonry**	
Hole drilling with hammer drill mode		all bricks; without C 18 to C 21	
Hole drilling with rotary drill mode		all bricks	
Static and quasi static load, in masonry		all bricks	
Use conditions	dry or wet masonry	all bricks	
Installation	Pre-positioned anchorage	Anchor rod or internal threaded sleeve (in solid brick masonry and autoclaved aerated concrete)	Perforated sleeve with anchor rod or internal threaded sleeve (in perforated and solid brick masonry) Size: FAKKT IM SH 12x85 K FAKKT IM SH 16x85 K FAKKT IM SH 16x130 K FAKKT IM SH 20x85 K FAKKT IM SH 20x130 K FAKKT IM SH 20x200 K
	Push through anchorage	Anchor rod; use only in cylindrical drill hole (in solid brick masonry and autoclaved aerated concrete)	---
Installation and use conditions	condition d/d condition w/d condition w/w	all bricks	
Installation temperature		$T_{i,min}$ = 0 °C to $T_{i,max}$ = +40 °C	
In-service temperature	Temperature range Tb	-40 °C to +80 °C	(max. short term temperature +80 °C max. long term temperature +50 °C)

Injection mortar FAKKT IM Z for masonry	**Annex B 1**
Intended Use Specifications part 1	

Electronic copy of the ETA by DIBt: ETA-22/0503

Specifications of intended use part 2

Anchorages subject to:

- Static and quasi-static loads

Base materials:

- Solid brick masonry (base material group b) and autoclaved aerated concrete (base material group d), acc. to Annex B 10
- Hollow brick masonry (base material group c), according to Annex B 10
- For minimum thickness of masonry member h_{ef}+30mm applies
- Mortar strength class of the masonry M2,5 at minimum according to EN 998-2:2016
- For other bricks in solid masonry, hollow or perforated masonry and autoclaved aerated concrete, the characteristic resistance of the anchor may be determined by job site tests according to EOTA Technical Report TR 053:2016-04, Annex B under consideration of the β-factor according to Annex C 27, Table C27.1

  Note (only applies to solid bricks and autoclaved aerated concrete):
  The characteristic resistance is also valid for larger brick sizes, higher compressive strength and higher raw density of the masonry unit.

Temperature Range:

- **Tb:** From - 40°C to +80°C (max. short term temperature +80°C and max. long term temperature +50°C)

Use conditions (Environmental conditions):

- **X1:** Structures subject to dry internal conditions exist
  (zinc coated steel, stainless steel or high corrosion resistant steel)
- **X2:** Structures subject to external atmospheric exposure including industrial and marine environment or exposure to permanently damp internal condition, if no particulary aggressive conditions exist
  (stainless steel or high corrosion resistant steel)
- **X3:** Structures subject to external atmospheric exposure and to permanently damp internal condition, if other particulary aggressive conditions exist (high corrosion resistant steel)

  Note: Particulary aggressive conditions are e.g. permanent, alternating immersion in seawater or the splash zone of seawater, chloride atmosphere of indoor swimming pools or atmosphere with extreme chemical pollution (e.g. in desulphurization plants or road tunnels where de-icing materials are used)

Electronic copy of the ETA by DIBt: ETA-22/0503

Specifications of intended use part 2 continued

Design:

- The anchorages have to be designed in accordance with EOTA Technical Report TR 054:2016-04, Design method A under the responsibility of an engineer experienced in anchorages and masonry work.
  Applies to all bricks, if no other values are specified:
  $N_{Rk} = N_{Rk,b} = N_{Rk,p}$
  $V_{Rk} = V_{Rk,b} = V_{Rk,c}$
  For the Calculation of pulling out a brick under tension loading $\mathbf{N_{Rk,pb}}$ or
  pushing out a brick under shear loading $\mathbf{V_{Rk,pb}}$ see EOTA Technical Report TR 054:2016-04.
  $\mathbf{N_{Rk,s}}$, $\mathbf{V_{Rk,s}}$ and $\mathbf{M^0_{Rk,s}}$ see annex C1-C3
  Factors for job site tests and displacements see Annex C 27
- Verifiable calculation notes and drawings have to be prepared taking account the relevant masonry in the region of the anchorage, the loads to be transmitted and their transmission to the supports of the structure. The position of the anchor is indicated on the design drawings.

Installation:

- Condition d/d: - Installation and use in dry structures
- Condition w/w: - Installation and use in dry and wet structures
- Condition w/d: - Installation in wet structures and use in dry structures
- Hole drilling see Annex C (drilling method)
- In case of aborted hole: The hole shall be filled with mortar
- Bridging of unbearing layer (e.g. plaster) at perforated brick masonry see Annex B 6, Table B6.1
- Anchor installation carried out by appropriately qualified personnel and under the supervision of the person responsible for technical matters of the site
- Fastening screws or anchor rods (including nut and washer) must comply with the appropriate material and property class of the FAKKT Internal threaded sleeve.
- minimum curing time see Annex B 7, Table B7.2
- Commercial standard threaded rods, washers and hexagon nuts may also be used if the following requirements are fulfilled:
  Material dimensions and mechanical properties of the metal parts according to the specifications are given in Annex A 5, Table 5.1
  Conformation of material and mechanical properties of the metal parts by inspection certificate 3.1 according to EN 10204:2004, the documents shall be stored
  Marking of the anchor rod with the envisage embedment depth. This may be done by the manufacturer of the rod or by a person on job site

Injection mortar FAKKT IM Z for masonry	**Annex B 3**
Intended Use Specifications part 2 continued	

Electronic copy of the ETA by DIBt: ETA-22/0503

Table B4.1: Installation parameters for anchor rods in solid bricks and autoclaved aerated concrete without perforated sleeves FAKKT IM SH K

Anchor rod	**Thread**	**M8**	**M10**	**M12**
Nominal drill hole diameter	d_0 [mm]	10	12	14
Effective anchorage depth h_{ef} [1)] in AAC cylindrical drill hole	$h_{0,min}=h_{ef,min}$ [mm]	100		
	$h_{0,max}=h_{ef,max}$ [mm]	min (h-30, ≤200)		
Effective anchorage depth h_{ef} [1)] in solid brick (depth of drill hole $h_0 = h_{ef}$)	$h_{ef,min}$ [mm]	50		
	$h_{ef,max}$ [mm]	min (h-30, ≤200)		
Diameter of clearance hole in the fixture	pre-position $d_f \leq$ [mm]	9	12	14
	push through $d_f \leq$ [mm]	11	14	16
Diameter of cleaning brush	$d_b \geq$ [mm]	see Table B7.1		
Maximum installation torque	max T_{inst} [Nm]	see parameters of brick Annex C		

1) $h_{ef,min} \leq h_{ef} \leq h_{ef,max}$ is possible.

FAKKT anchor rods M8, M10, M12

Marking (on random place) FAKKT anchor rod:

Steel zinc plated PC[1)] 8.8	• or +	Steel hot-dip galvanised PC[1)] 8.8	•
High corrosion resistant steel HCR PC[1)] 50	•	High corrosion resistant steel HCR PC[1)] 70	–
High corrosion resistant steel HCR PC[1)] 80	(	Stainless steel R property class 50	~
Stainless steel R property class 80	✳		

Alternatively: Colour coding according to DIN 976-1: 2016; 1) PC = property class

Installation conditions:

Anchor rod in cylindrical drill hole

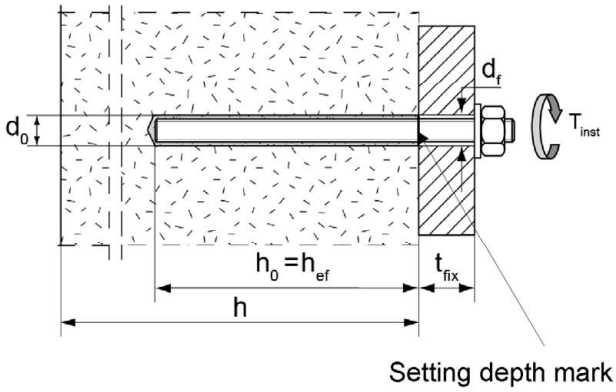

Figures not to scale

Injection mortar FAKKT IM Z for masonry

Intended Use
Installation parameters for anchor rods without perforated sleeve

Annex B 4

Electronic copy of the ETA by DIBt: ETA-22/0503

Table B5.1: Installation parameters for FAKKT internal threaded sleeve in solid bricks and autoclaved aerated concrete without perforated sleeves
FAKKT IM SH K

FAKKT Internal threaded sleeve		**11x85 M6**	**11x85 M8**	**15x85 M10**	**15x85 M12**
Diameter of anchor	d_H [mm]	11		15	
Nominal drill hole diameter	d_0 [mm]	14		18	
Length of anchor	L_H [mm]	85			
Effective anchorage depth	$h_0 = h_{ef}$ [mm]	85			
Diameter of cleaning brush	$d_b \geq$ [mm]	see Table B7.1			
Maximum installation torque	max T_{inst} [Nm]	see parameters of brick Annex C			
Diameter of clearance hole in the fixture	d_f [mm]	7	9	12	14
Screw-in depth	$l_{E,min}$ [mm]	6	8	10	12
	$l_{E,max}$ [mm]	60			

FAKKT Internal threaded sleeve

11x85 M6, 11x85 M8

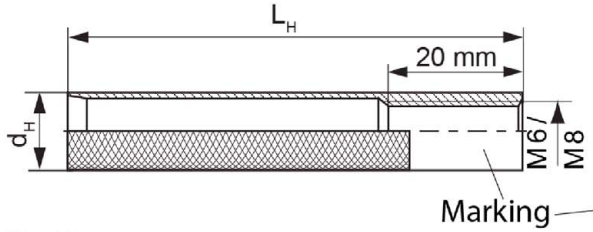

15x85 M10, 15x85 M12

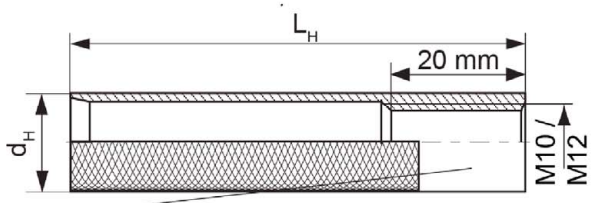

Marking:

Size, e.g. **M8**, Stainless steel: R, e.g. **M8 R**, High corrosion-resistant steel: HCR, e.g. **M8 HCR**

Installation conditions:

FAKKT Internal threaded sleeve in cylindrical drill hole

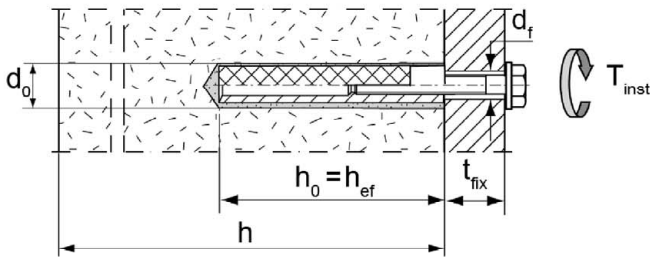

Figures not to scale

Injection mortar FAKKT IM Z for masonry

Intended Use
Installation parameters for FAKKT internal threaded sleeve without perforated sleeve

Annex B 5

Electronic copy of the ETA by DIBt: ETA-22/0503

Table B6.1: Installation parameters for anchor rods and FAKKT internal threaded sleeves with perforated sleeves (pre-positioned anchorage)

perforated sleeve FAKKT IM SH K		**12x85**	**16x85**	**16x130[2)]**	**20x85**	**20x130[2)]**	**20x200[2)]**
Nominal drill hole diameter $d_0 = D_{sleeve,nom}$	d_0 [mm]	12	16		20		
Depth of drill hole	h_0 [mm]	90	90	135	90	135	205
Effective anchorage depth	$h_{ef,min}$ [mm]	85	85	110	85	110	180
	$h_{ef,max}$ [mm]	85	85	130	85	130	200
Size of threaded rod	[-]	M8	M8 and M10		M12		
Size of FAKKT internal threaded sleeve		-	11x85	-	15x85	-	-
Diameter of cleaning brush[1)]	$d_b \geq$ [mm]	see Table B7.1					
Max. installation torque	max T_{inst} [Nm]	see parameters of brick Annex C					

[1)] Only for solid areas in hollow bricks and solid bricks.
[2)] Bridging of unbearing layer (e.g. plaster) is possible. When reducing the effective anchorage depth $h_{ef,min}$, the values of the next shorter perforated sleeve of the same diameter must be used. The smaller value of charastereristic resistance must be taken.

Perforated sleeve

SH 12x85 K; SH 16x85 K; SH 16x130 K;
SH 20x85 K, SH 20x130 K: SH 20x200 K

Marking:
Size $D_{sleeve,\,nom}$ x L_{sleeve}
(e.g.: 16x85)

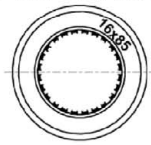

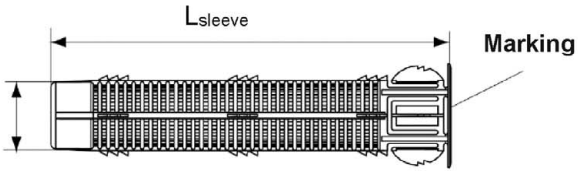

FAKKT Internal threaded sleeve

11x85 M6, 11x85 M8

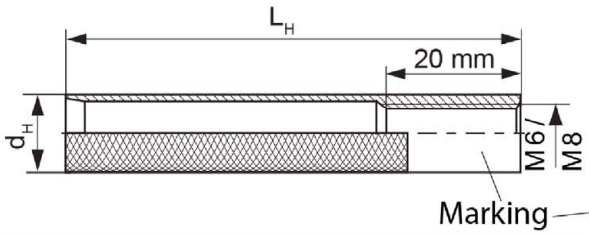

15x85 M10, 15x85 M12

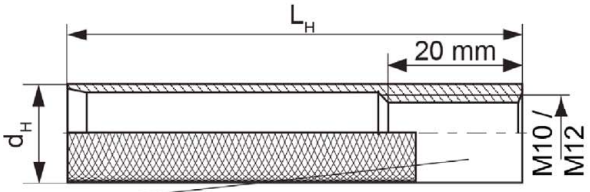

Installation conditions:

Anchor rod with perforated sleeve

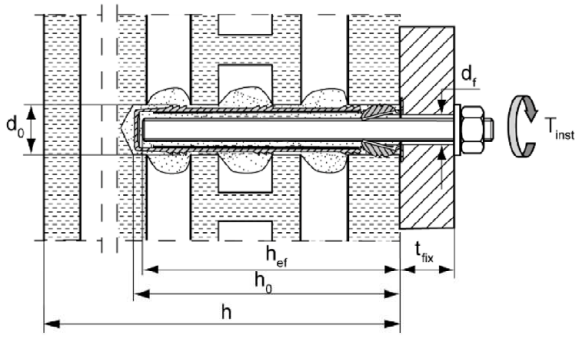

Internal threaded sleeve with perforated sleeve

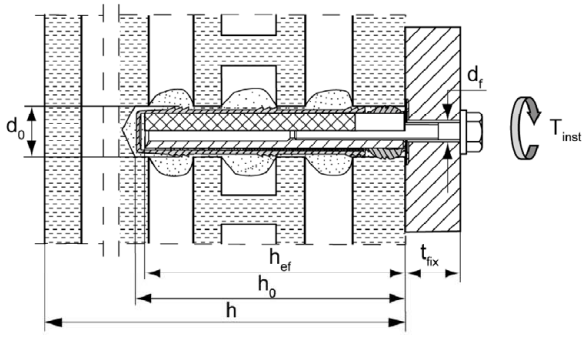

Figures not to scale

Injection mortar FAKKT IM Z for masonry

Intended Use
Installation parameters for anchor rods and FAKKT internal threaded sleeve with perforated sleeve (pre-positioned anchorage)

Annex B 6

Electronic copy of the ETA by DIBt: ETA-22/0503

Table B7.1: Parameters of the FAKKT cleaning brush (steel brush with steel bristles)

The size of the cleaning brush refers to the drill hole diameter

Drill hole diameter	d_0 [mm]	8	10	12	14	16	18	20
Brush diameter	d_b [mm]	9	11	14	16	20	20	25

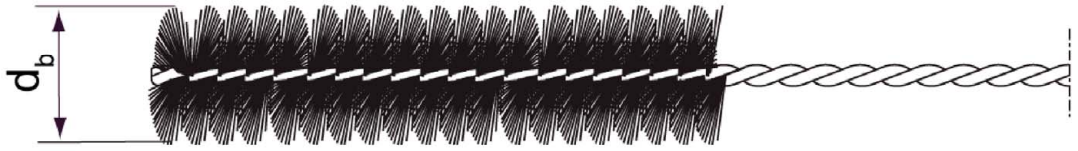

Only for solid bricks and autoclaved aerated concrete or solid areas of perforated bricks and hollow blocks

Table B7.2: Maximum processing times and minimum curing times
(During the curing time of the mortar the masonry temperature may not fall below the listed minimum temperature)

Temperature at anchoring base [°C]	Maximum processing time t_{work}	Minimum curing time [1] t_{cure}
	FAKKT IM Z [2]	FAKKT IM Z [2]
0 to 5	13 min	3 h
> 5 to 10	9 min	90 min
> 10 to 20	5 min	60 min
> 20 to 30	4 min	45 min
> 30 to 40	2 min	35 min

[1] For wet bricks the curing time must be doubled

[2] Minimum cartridge temperature +5°C

Figures not to scale

Injection mortar FAKKT IM Z for masonry

Intended use
Cleaning brush (steel brush)
Maximum processing times and minimum curing times

Annex B 7

Electronic copy of the ETA by DIBt: ETA-22/0503

Installation instruction part 1

Installation in solid brick and autoclaved aerated concrete (without perforated sleeve)

1	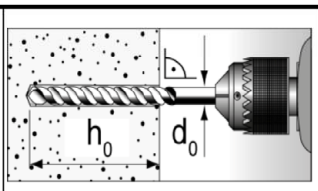	Drill the hole (drilling method see Annex C of the respective brick) depth of drill hole $\mathbf{h_0}$ and drill hole diameter $\mathbf{d_0}$ see **Table B4.1; B5.1**		
2	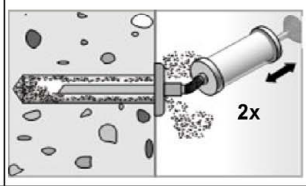	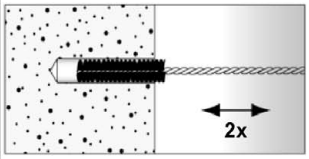	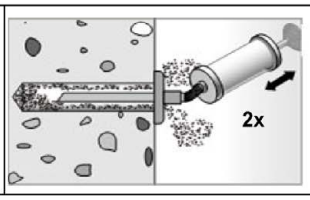	Blow out the drill hole twice. Brush twice and blow out twice again.
3	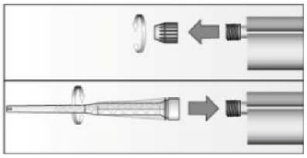	Remove the sealing cap. Screw on the static mixer. (the spiral in the static mixer must be clearly visible)		
4	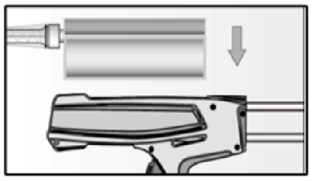	Place the cartridge into a suitable dispenser	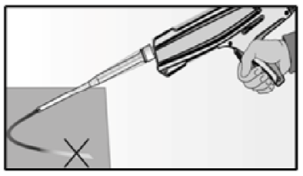	Press out approximately 10 cm of mortar until the resin is permanently grey in colour. Mortar which is not grey in colour will not cure and must be disposed of.
5	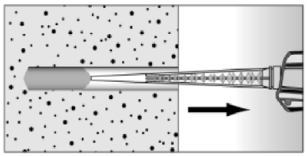	Fill approximetly 2/3 of the drill hole with mortar beginning from the bottom of the hole[1]. Avoid bubbles!	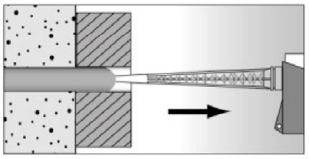	For push through anchorage (not FAKKT Internal threaded sleeve) fill the annular clearance with mortar.
6	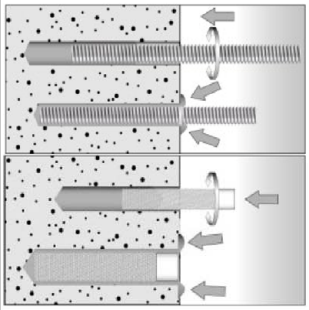	Only use clean and oil-free metal parts. Mark the anchor rod for setting depth. Insert the anchor rod or FAKKT Internal threaded sleeve by hand using light turning motions. When reaching the setting depth marking, excess mortar must emerge from the mouth of the drill hole.		
7		Do not touch. Minimum curing time see Table **B7.2**	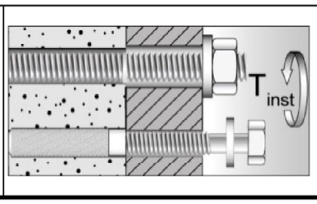	Mounting the fixture. max T_{inst} see parameter of brick in Annex C.

[1] Exact volume of mortar see manufacturer´s specification.

Injection mortar FAKKT IM Z for masonry	**Annex B 8**
Intended use Installation instruction (without perforated sleeve) part 1	

Electronic copy of the ETA by DIBt: ETA-22/0503

Installation instruction part 2

Installation in perforated or solid brick with perforated sleeve (pre-positioned anchorage)

1	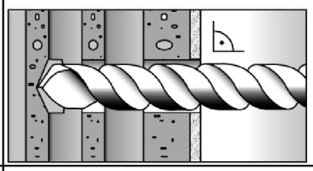	Drill the hole (drilling method see Annex C of the respective brick). depth of drill hole $\mathbf{h_0}$ and drill hole diameter $\mathbf{d_0}$ see **Table B6.1**	When install perforated sleeves in solid bricks or solid areas of hollow bricks, also clean the hole by blowing out and brushing.	
2	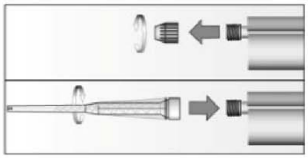	Remove the sealing cap. Screw on the static mixer. (the spiral in the static mixer must be clearly visible)		
3	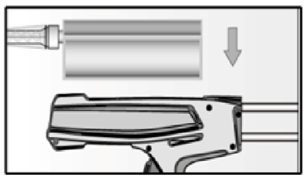	Place the cartridge into a suitable dispenser.	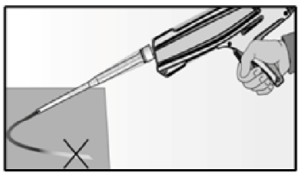	Press out approximately 10 cm of mortar until the resin is permanently grey in colour. Mortar which is not grey in colour will not cure and must be disposed of.
4	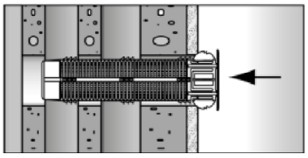	Insert the perforated sleeve flush with the surface of the masonry or plaster.	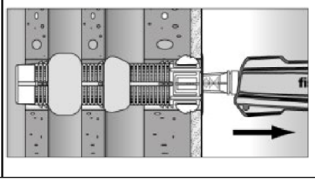	Fill the perforated sleeve completely with mortar beginning from the bottom of the hole[1].
5	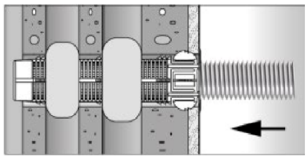	Only use clean and oil-free metal parts. Mark the ancher rod for setting depth. Insert the anchor rod or the FAKKT internal threaded sleeve by hand using light turning motions until reaching the setting depth marking (anchor rod) or flush with the surface (internal threaded sleeve).		
6		Do not touch. Minimum curing time see Table **B8.2**	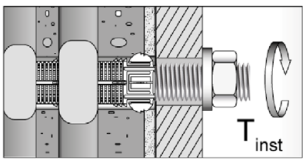	Mounting the fixture. max T_{inst} see parameter of brick in Annex C.

[1] Exact volume of mortar see manufacturer´s specification.

Injection mortar FAKKT IM Z for masonry	**Annex B 9**
Intended use Installation instruction (with perforated sleeve) part 2	

Electronic copy of the ETA by DIBt: ETA-22/0503

Table B10.1: Overview of controlled bricks part 1

Kind of masonry	Brick format [mm]		Compressive strength f_b [N/mm²]	Producing counrty	Density ρ [kg/dm³]	Annex
Solid brick Mz						
Solid brick Mz	**NF**	≥240x115x71	12; 20	Germany	≥1,8	C 4 – C 7
	2DF	≥240x115x113	10; 16	Germany	≥1,8	C 8 / C 9
Solid sand- lime brick KS / perforated Sand- lime brick KSL						
Solid sand - lime brick KS	**NF**	≥240x115x71	12; 20	Germany	≥2,0	C10 / C 11
Perforated sand - lime brick KSL	**3DF**	240x175x113	12; 20	Germany	≥1,4	C 12 / C 13
Vertical perforated brick HLz						
Vertical perforated brick HLz		370x240x237	10	Germany	≥1,0	C 14 / C 15
		500x175x237	10	Germany	≥1,0	C 14 / C 15
	2DF	240x115x113	20	Germany	≥1,4	C 16 / C 17
		248x365x249	8; 10; 12	Germany	≥0,7	C 18 / C 19
		248x425x248	4; 6; 8	Germany	≥0,6	C 20 / C 21
Light-weight concrete hollow block Hbl						
Light-weight concrete hollow block Hbl		362x240x240	4	Germany	≥1,0	C 22 / C 23
Autoclaved aerated concrete						
PP2 / AAC		-	2	Germany	0,35	C 24 - C 26
PP4 / AAC		-	4	Germany	0,50	C 24 - C 26
PP6 / AAC		-	6	Germany	0,65	C 24 - C 26

Injection mortar FAKKT IM Z for masonry

Intended use
Overview of controlled bricks part 1

Annex B 10

Electronic copy of the ETA by DIBt: ETA-22/0503

Table B11.1: Overview dimensions of perforated and hollow bricks part 1

Perforated sand-lime brick KSL, 3DF,
EN 771-2:2011+A1:2015; e.g. KS Wemding according to Annex C 12

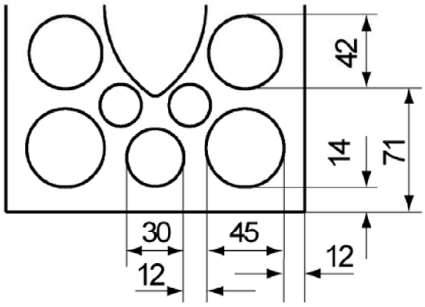

Vertical perforated brick HLz,
EN 771-1:2011+A1:2015: e.g. Wienerberger, Poroton according to Annex C 14

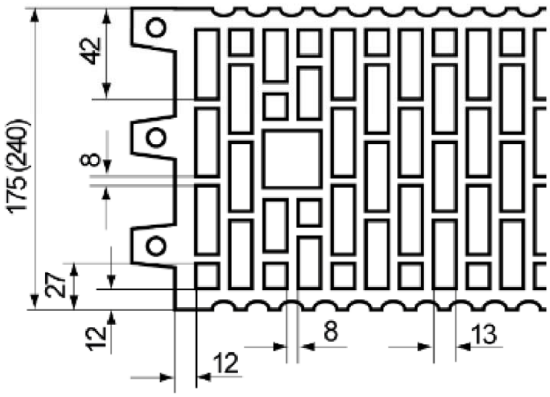

Vertical perforated brick HLz, 2DF,
EN 771-1:2011+A1:2015;
e.g. Wienerberger according to Annex C 16

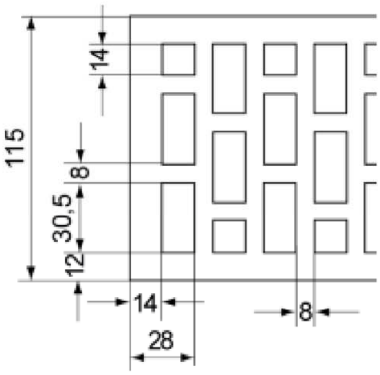

Vertical perforated brick HLz, T10, T11,
EN 771-1:2011+A1:2015; according to Annex C 18

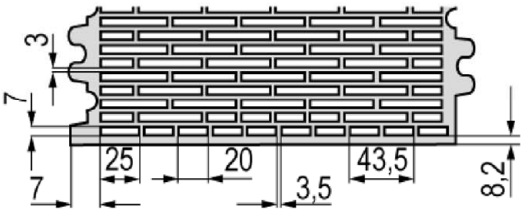

Figures not to scale

Injection mortar FAKKT IM Z for masonry

Intended use
Overview dimensions of perforated and hollow bricks part 1

Annex B 11

Electronic copy of the ETA by DIBt: ETA-22/0503

Table B12.1: Overview dimensions of perforated and hollow bricks part 2

Vertical perforated brick HLz, FZ 7, filled with mineral wool, EN 771-1:2011+A1:2015; according to Annex C 20

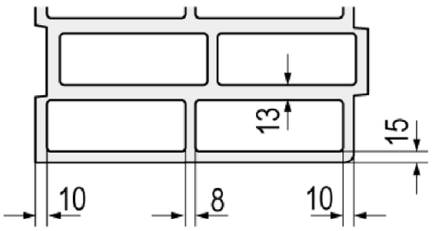

Light-weight concrete hollow block Hbl, EN 771-3:2011+A1:2015; according to Annex C 22

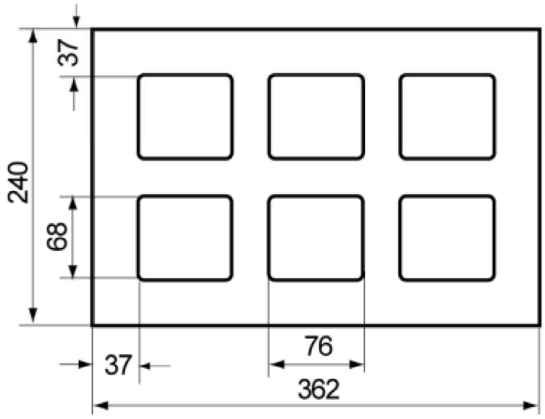

Figures not to scale

Injection mortar FAKKT IM Z for masonry

Intended use
Overview dimensions of perforated and hollow bricks part 2

Annex B 12

Electronic copy of the ETA by DIBt: ETA-22/0503

Spacing and edge distance

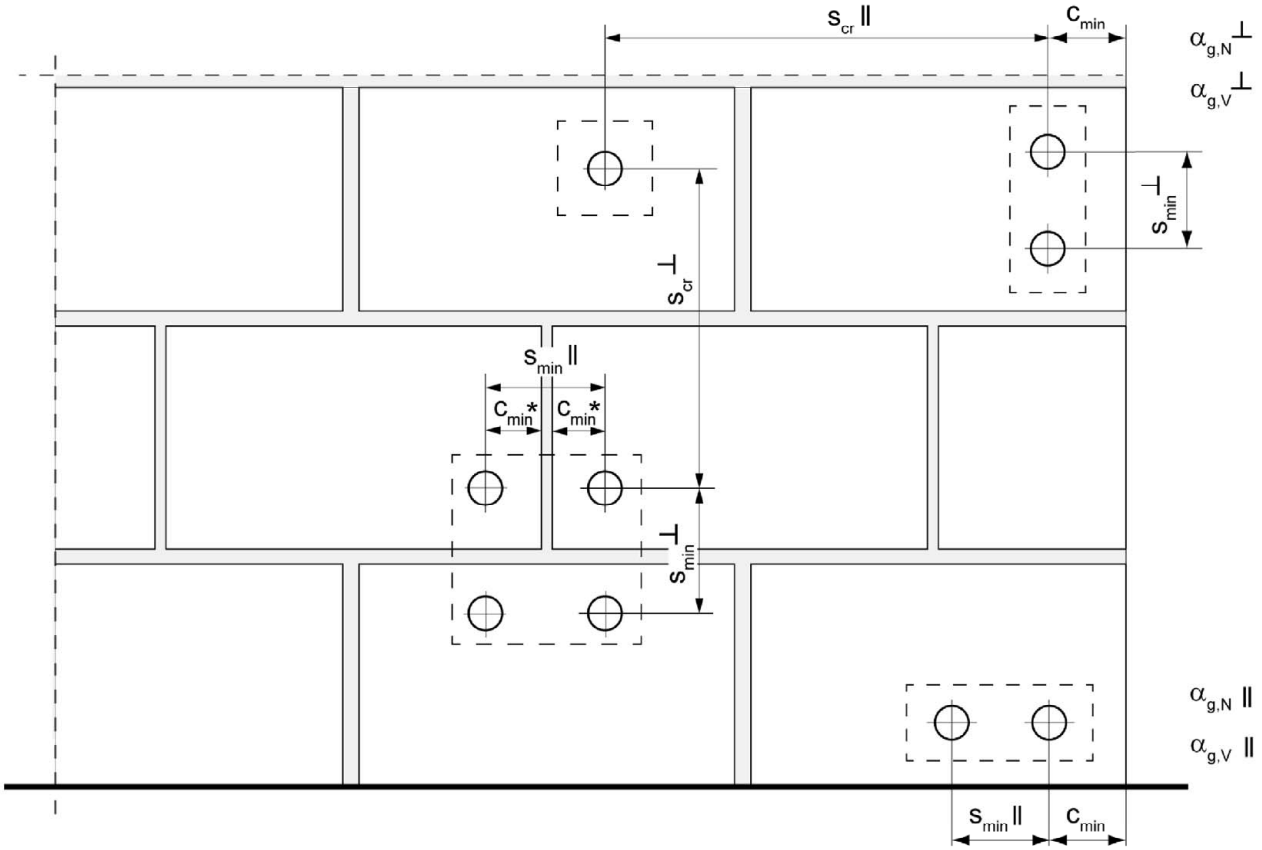

* Only, if vertical joints are not completely filled with mortar

s_{min} II	=	Minimum spacing parallel to bed joint
s_{min} ⊥	=	Minimum spacing vertical to bed joint
s_{cr} II	=	Characteristic spacing parallel to bed joint
s_{cr} ⊥	=	Characteristic spacing vertical to bed joint
$c_{cr} = c_{min}$	=	Edge distance
$\alpha_{g,N}$ II	=	Group factor for tension loading, anchor group parallel to bed joint
$\alpha_{g,V}$ II	=	Group factor for shear loading, anchor group parallel to bed joint
$\alpha_{g,N}$ ⊥	=	Group factor for tension loading, anchor group vertical to bed joint
$\alpha_{g,V}$ ⊥	=	Group factor for shear loading, anchor group vertical to bed joint

For $s \geq s_{cr}$ $\alpha_g = 2$

For $s_{min} \leq s < s_{cr}$ α_g according to installation parameters of brick

$N^g_{Rk} = \alpha_{g,N} \cdot N_{Rk}$; $V^g_{Rk} = \alpha_{g,V} \cdot V_{Rk}$ (Group of 2 anchors)

$N^g_{Rk} = \alpha_{g,N}$ II $\cdot$ $\alpha_{g,N}$⊥ $\cdot N_{Rk}$; $V^g_{Rk} = \alpha_{g,V}$ II $\cdot$ $\alpha_{g,V}$⊥ $\cdot V_{Rk}$ (Group of 4 anchors)

Injection mortar FAKKT IM Z for masonry	**Annex B 13**
Intended use Spacing and edge distance	

Electronic copy of the ETA by DIBt: ETA-22/0503

Table C1.1: Characteristic **resistance** to **steel failure** under tension loading of FAKKT **anchor rods** and **standard threaded rods**

Anchor rod / standard threaded rod				**M8**	**M10**	**M12**
Characteristic resistance to steel failure under tension loading [3]						
Characteristic resistance $N_{Rk,s}$	Steel zinc plated	Property class 4.8	[kN]	15(13)	23(21)	33
		5.8		19(17)	29(27)	43
		8.8		29(27)	47(43)	68
	Stainless steel R and High corrosion resistant steel HCR	50		19	29	43
		70		26	41	59
		80		30	47	68
Partial factors [1]						
Partial factor $\gamma_{Ms,N}$	Steel zinc plated	Property class 4.8	[-]	1,50		
		5.8		1,50		
		8.8		1,50		
	Stainless steel R and High corrosion resistant steel HCR	50		2,86		
		70		1,50[2] / 1,87		
		80		1,60		

[1] In absence of other national regulations

[2] Only for FAKKT IM AS made of high corrosion-resistant steel HCR

[3] Values in brackets are valid for undersized threaded rods with smaller stress area A_s for hot dip galvanised FAKKT anchor rod and standard threaded rods according to EN ISO 10684:2004+AC:2009

Electronic copy of the ETA by DIBt: ETA-22/0503

Table C2.1: Characteristic resistance to **steel failure** of FAKKT **anchor rods** and **standard threaded rods under shear loading**

Anchor rod / standard threaded rod					**M8**	**M10**	**M12**
Characteristic resistance to steel failure under shear loading [3]							
without lever arm							
Characteristic resistance $V_{Rk,s}$	Steel zinc plated	Property class	4.8	[kN]	9(8)	14(13)	20
			5.8		11(10)	17(16)	25
			8.8		15(13)	23(21)	34
	Stainless steel R and High corrosion resistant steel HCR		50		9	15	21
			70		13	20	30
			80		15	23	34
with lever arm							
Characteristic resistance $M^0_{Rk,s}$	Steel zinc plated	Property class	4.8	[Nm]	15(13)	30(27)	52
			5.8		19(16)	37(33)	65
			8.8		30(26)	60(53)	105
	Stainless steel R and High corrosion resistant steel HCR		50		19	37	65
			70		26	52	92
			80		30	60	105
Partial factors [1]							
Partial factor $\gamma_{Ms,V}$	Steel zinc plated	Property class	4.8	[-]	1,25		
			5.8		1,25		
			8.8		1,25		
	Stainless steel R and High corrosion resistant steel HCR		50		2,38		
			70		1,25 [2] / 1,56		
			80		1,33		

[1] In absence of other national regulations

[2] Only for FAKKT IM AS made of high corrosion-resistant steel HCR

[3] Values in brackets are valid for undersized threaded rods with smaller stress area A_s for hot dip galvanised FAKKT anchor rod and standard threaded rods according to EN ISO 10684:2004+AC:2009.

Injection mortar FAKKT IM Z for masonry

Performance
Characteristic steel bearing capacity of FAKKT anchor rods and standard threaded rods under shear loading

Annex C 2

Electronic copy of the ETA by DIBt: ETA-22/0503

Table C3.1: Characteristic **resistance to steel failure** of FAKKT **Internal threaded sleeves under tension / shear loading**

FAKKT Internal threaded sleeve					**M6**	**M8**	**M10**	**M12**
Characteristic resistance to steel failure under tension loading,								
Characteristic resistance with screw	$N_{Rk,s}$	Property class	5.8	[kN]	10	18	29	42
		Property class 70	R		14	26	41	59
			HCR		14	26	41	59
Partial factors[1)]								
Partial factor	$\gamma_{Ms,N}$	Property class	5.8	[-]	1,50			
		Property class 70	R		1,87			
			HCR		1,87			
Characteristic resistance to steel failure under shear loading								
without lever arm								
Characteristic resistance with screw	$V_{Rk,s}$	Property class	5.8	[kN]	5	9	15	21
		Property class 70	R		7	13	20	30
			HCR		7	13	20	30
with lever arm								
Characteristic resistance	$M^0_{Rk,s}$	Property class	5.8	[Nm]	8	19	37	65
		Property class 70	R		11	26	52	92
			HCR		11	26	52	92
Partial factors[1)]								
Partial factor	$\gamma_{Ms,V}$	Property class	5.8	[-]	1,25			
		Property class 70	R		1,56			
			HCR		1,56			

[1)] In absence of other national regulations

Electronic copy of the ETA by DIBt: ETA-22/0503

Injection mortar FAKKT IM Z for masonry

Performance
Characteristic resistance to steel failure under tension and shear loading of FAKKT internal threaded sleeve

Annex C 3

Solid brick Mz, NF, EN 771-1:2011+A1:2015

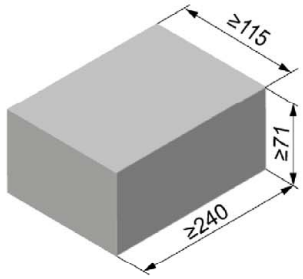

Solid brick Mz, NF, EN 771-1:2011+A1:2015			
Producer	e.g. Wienerberger		
Nominal dimensions [mm]	length L	width W	height H
	≥ 240	≥ 115	≥ 71
Density ρ [kg/dm³]	≥ 1,8		
Compressive strength f_b [N/mm²]	12; 20		
Standard	EN 771-1:2011+A1:2015		

Table C4.1: Installation parameters for edge distance c=100mm

Anchor rod			**M8**	**M10**	**M12**	**-**	
FAKKT Internal threaded sleeve			**-**	**-**	**-**	**M6**	**M8**
						11x85	
Anchor rod and FAKKT Internal threaded sleeve without perforated sleeve FAKKT IM SH K							
Effective anchorage depth	h_{ef}	[mm]	50	50	50	85	
			80	80	80		
			200	200	200		
Max. installation torque	max T_{inst}	[Nm]	10			4	10
General installation parameters							
Edge distance	c_{min}	[mm]	100			100	
Edge distance h_{ef}=200	c_{min}		150			-[1]	
Spacing	s_{min} II,N		60			60	
	h_{ef}=200 s_{min} II,N		240			-[1]	
	s_{min} II,V		240			240	
	s_{cr} II		240			240	
	s_{cr} ⊥ = s_{min} ⊥		75			75	
Drilling method							
Hammer drilling with hard metal hammer drill							

[1] No performance assessed

Table C4.2: Group factors

Anchor rods			**M8**	**M10**	**M12**	**-**	
FAKKT Internal threaded sleeve			**-**	**-**	**-**	**M6**	**M8**
						11x85	
Edge distance	c_{min}	[mm]	**100**				
Group factor	$\alpha_{g,N}$ II	[-]	1,5				
	$\alpha_{g,V}$ II		2,0				
	h_{ef}=200 $\alpha_{g,N}$ II		1,5				
	h_{ef}=200 $\alpha_{g,V}$ II		2,0				
	$\alpha_{g,N}$ ⊥		2,0				
	$\alpha_{g,V}$ ⊥		2,0				
	h_{ef}=200 $\alpha_{g,N}$ ⊥		2,0				
	h_{ef}=200 $\alpha_{g,V}$ ⊥		2,0				

Injection mortar FAKKT IM Z for masonry

Performance
Solid brick Mz, NF, dimensions, installation parameters c=100mm

Annex C 4

Electronic copy of the ETA by DIBt: ETA-22/0503

Solid brick Mz, NF, EN 771-1:2011+A1:2015

Table C5.1: Characteristic resistance under tension loading for edge distance c=100mm

Anchor rod		**M8**		**M10**		**M12**			**-**	
FAKKT Internal threaded sleeve		**-**		**-**		**-**			**M6**	**M8**
									11x85	
$N_{Rk} = N_{Rk,b} = N_{Rk,p}$ [kN] depending on the compressive strength f_b (temperature range 50/80°C)										
compressive strength f_b	use condition	Effective anchorage depth h_{ef} [mm]								
		≥ 50	50	80	200	50	80	200	85	
12 N/mm²	w/w w/d	2,5	2,0	3,0	7,5	2,0	3,5	5,0	3,5	
	d/d	4,0	3,5	5,0	12,0	3,0	5,5	8,0	5,5	
20 N/mm²	w/w w/d	3,5	3,0	4,5	11,0	3,0	5,0	7,0	5,0	
	d/d	5,5	5,0	7,0	12,0	4,5	8,0	11,5	8,0	

Table C5.2: Characteristic resistance under shear loading for edge distance c=100mm

Anchor rod		**M8**		**M10**		**M12**		**-**	
FAKKT Internal threaded sleeve		**-**		**-**		**-**		**M6**	**M8**
								11x85	
$V_{Rk} = V_{Rk,b} = V_{Rk,c}$ [kN] depending on the compressive strength f_b (temperature range 50/80°C)									
compressive strength f_b	use condition	Effective anchorage depth h_{ef} [mm]							
		≥ 50	≥ 50	200	≥ 50	200	85		
12 N/mm²	w/w w/d d/d	2,5	4,0	8,5	4,0	11,5	2,5		
20 N/mm²	w/w w/d d/d	4,0	6,0	12,0	5,5	12,0	4,0		

Factor for job site tests and displacements see annex C 27

Injection mortar FAKKT IM Z for masonry

Performance
Solid brick Mz, NF, Characteristic resistance under tension and shear loading c=100mm

Annex C 5

Electronic copy of the ETA by DIBt: ETA-22/0503

Solid brick Mz, NF, EN 771-1:2011+A1:2015

Table C6.1: Installation parameters for edge distance c=60mm

Anchor rod			**M8**	**M10**	**M12**	**-**	
FAKKT Internal threaded sleeve			**-**	**-**	**-**	**M6**	**M8**
						11x85	
Anchor rod and FAKKT Internal threaded sleeve without perforated sleeve							
Effective anchorage depth	h_{ef}	[mm]	50	50	50	85	
			100	100	100		
			200	200	200		
Max. installation torque	max T_{inst}	[Nm]	10			4	10
General installation parameters							
Edge distance	c_{min}	[mm]	60				
Edge distance h_{ef}=200	c_{min}		60				
Spacing	s_{min} II,N		80				
	h_{ef}=200 s_{min} II,N		80				
	s_{min} II,V		80				
	s_{cr} II		3x h_{ef}				
	s_{min} ⊥		80				
	s_{cr} ⊥		3x h_{ef}				
Drilling method							
Hammer drilling with hard metal hammer drill							

Table C6.2: Group factors

Anchor rod			**M8**	**M10**	**M12**	**-**	
FAKKT Internal threaded sleeve			**-**	**-**	**-**	**M6**	**M8**
						11x85	
Edge distance	c_{min}	[mm]	60				
Group factor	$\alpha_{g,N}$ II	[-]	0,6				
	$\alpha_{g,V}$ II		1,3				
	h_{ef}=200 $\alpha_{g,N}$ II		1,4				
	h_{ef}=200 $\alpha_{g,V}$ II		1,5				
	$\alpha_{g,N}$ ⊥		0,3				
	$\alpha_{g,V}$ ⊥		1,3				
	h_{ef}=200 $\alpha_{g,N}$ ⊥		2,0				
	h_{ef}=200 $\alpha_{g,V}$ ⊥		1,1				

Injection mortar FAKKT IM Z for masonry

Performance
Solid brick Mz, NF, dimensions, installation parameters c=60mm

Annex C 6

Electronic copy of the ETA by DIBt: ETA-22/0503

Solid brick Mz, NF, EN 771-1:2011+A1:2015

Table C7.1: Characteristic resistance under tension loading for edge distance c=60mm

Anchor rod		**M8**		**M10**		**M12**			**-**	
FAKKT Internal threaded sleeve		**-**		**-**		**-**			**M6**	**M8**
									11x85	
$N_{Rk} = N_{Rk,b} = N_{Rk,p}$ [kN] depending on the compressive strength f_b (temperature range 50/80°C)										
compres-sive strength f_b	use condition	Effective anchorage depth h_{ef} [mm]								
		50	100	50	100	200	50	100	200	85
12 N/mm²	w/w w/d	2,0	2,0	2,0	2,5	-[1)]	2,0	2,5	-[1)]	-[1)]
	d/d	3,0	4,0	3,0	4,0	9,5	3,0	4,0	9,5	-[1)]
20 N/mm²	w/w w/d	2,5	3,0	2,5	3,5	-[1)]	3,0	3,5	-[1)]	-[1)]
	d/d	4,5	5,5	4,5	5,5	12	4,5	5,5	12	-[1)]

[1)] No performance assessed

Table C7.2: Characteristic resistance under shear loading for edge distance c=60mm

Anchor rod		**M8**		**M10**		**M12**			**-**	
FAKKT Internal threaded sleeve		**-**		**-**		**-**			**M6**	**M8**
									11x85	
$V_{Rk} = V_{Rk,b} = V_{Rk,c}$ [kN] depending on the compressive strength f_b (temperature range 50/80°C)										
compres-sive strength f_b	use condition	Effective anchorage depth h_{ef} [mm]								
		50	100	50	100	200	50	100	200	85
12 N/mm²	w/w w/d d/d	1,2	3,0	2,0	3,0	1,5	1,5	3,0	3,0	-[1)]
20 N/mm²	w/w w/d d/d	1,5	4,5	3,0	4,5	2,5	2,0	4,5	4,5	-[1)]

[1)] No performance assessed

Factor for job site tests and displacements see annex C 27

Injection mortar FAKKT IM Z for masonry

Performance
Solid brick Mz, NF, Characteristic resistance under tension and shear loading c=60mm

Annex C 7

Electronic copy of the ETA by DIBt: ETA-22/0503

Solid brick Mz, 2DF, EN 771-1:2011+A1:2015

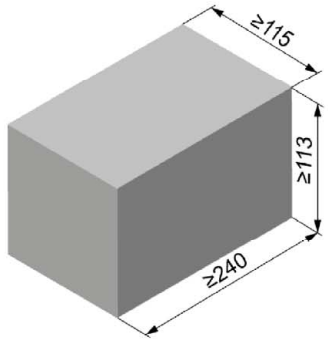

Solid brick Mz, 2DF, EN 771-1:2011+A1:2015			
Producer	e.g. Wienerberger		
Nominal dimensions [mm]	length L	width W	height H
	≥ 240	≥ 115	≥ 113
Density ρ [kg/dm³]	≥ 1,8		
Compressive strength f_b [N/mm²]	10; 16		
Standard	EN 771-1:2011+A1:2015		

Table C8.1: Installation parameters

Anchor rod			**M8**		**M10**		**M12**		**-**		**-**	
FAKKT Internal threaded sleeve			**-**		**-**		**-**		**M6**	**M8**	**M10**	**M12**
									11x85		**15x85**	
Anchor rod and FAKKT Internal threaded sleeve without perforated sleeve												
Effective anchorage depth	h_{ef}	[mm]	50	100	50	100	50	100	85			
Max. installation torque	max T_{inst}	[Nm]	10						4	10		
Anchor rod and FAKKT Internal threaded sleeve with perforated sleeve FAKKT IM SH 16x85 K												
Effective anchorage depth	h_{ef}	[mm]	85				-[1)]		85		-[1)]	
Max. installation torque	T_{inst}	[Nm]	10						4	10		
General installation parameters												
Edge distance	c_{min}	[mm]	60									
Spacing	s_{min} ∥	[mm]	120									
	s_{cr} ∥	[mm]	240									
	s_{cr} ⊥ = s_{min} ⊥	[mm]	115									
Drilling method												
Hammer drilling with hard metal hammer drill												

1) No performance assessed

Table C8.2: Group factors

Anchor rods			**M8**	**M10**	**M12**	**-**		**-**	
FAKKT Internal threaded sleeve			**-**	**-**	**-**	**M6**	**M8**	**M10**	**M12**
						11x85		**15x85**	
Group factor	$\alpha_{g,N}$ ∥	[-]	1,5						
	$\alpha_{g,V}$ ∥	[-]	1,4						
	$\alpha_{g,N}$ ⊥	[-]	2						
	$\alpha_{g,V}$ ⊥	[-]							

Injection mortar FAKKT IM Z for masonry

Performance
Solid brick Mz, 2DF, dimensions, installation parameters

Annex C 8

Electronic copy of the ETA by DIBt: ETA-22/0503

Solid brick Mz, 2DF, EN 771-1:2011+A1:2015

Table C9.1: Characteristic resistance under tension loading

Anchor rod	M8	M10	M12	-		-		M8	M10	-	
FAKKT Internal threaded sleeve	-	-	-	M6	M8	M10	M12	-	-	M6	M8
				11x85		15x85				11x85	
Perforated sleeve FAKKT IM SH K	-	-	-	-		-		16x85			

$N_{Rk} = N_{Rk,b} = N_{Rk,p}$ [kN] depending on the compressive strength f_b (temperature range 50/80°C)

compressive strength f_b	use condition	Effective anchorage depth h_{ef} [mm]							
		50	100	50	100	50	100	85	
10 N/mm²	w/w w/d	1,5	2,5	1,5	3	2	3,5	2	1,5
	d/d	3,0	4,0	3,0	4,5	3	5,5	3	3
16 N/mm²	w/w w/d	2,5	4	2,5	4,5	3,5	5,5	3,5	2,5
	d/d	4,5	7,0	4,5	7,5	5,5	8	5,5	4,5

Table C9.2: Characteristic resistance under shear loading

Anchor rod	M8	M10	M12	-		-		M8	M10	-	
FAKKT Internal threaded sleeve	-	-	-	M6	M8	M10	M12	-	-	M6	M8
				11x85		15x85				11x85	
Perforated sleeve FAKKT IM SH K	-	-	-	-		-		16x85			

$V_{Rk} = V_{Rk,b} = V_{Rk,c}$ [kN] depending on the compressive strength fb (temperature range 50/80°C)

compressive strength f_b	use condition	Effective anchorage depth h_{ef} [mm]										
		≥ 50			85							
10 N/mm²	w/w w/d	3,0	3,0	3,5	2,5	3,0	3,0	3,0	3,0	3,5	2,5	3,0
	d/d											
16 N/mm²	w/w w/d	5,0	5,5	5,5	4,0	5,0	5,0	5,0	5,0	6,0	4,0	5,0
	d/d											

Factor for job site tests and displacements see annex C 27

Electronic copy of the ETA by DIBt: ETA-22/0503

Solid sand-lime brick KS, NF, EN 771-2:2011+A1:2015

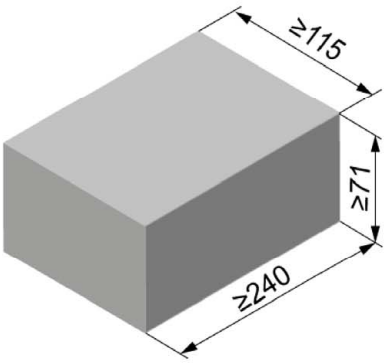

Solid sand-lime brick KS, NF, EN 771-2:2011+A1:2015			
Producer			
Nominal dimensions [mm]	length L	width W	height H
	≥ 240	≥ 115	≥ 71
Density ρ [kg/dm³]	≥ 2,0		
Compressive strength f_b [N/mm²]	12; 20		
Standard	EN 771-2:2011+A1:2015		

Table C10.1: Installation parameters

Anchor rod			M8	M10	M12	-	
FAKKT Internal threaded sleeve			-	-	-	M6	M8
						11x85	
Anchor rod and FAKKT Internal threaded sleeve without perforated sleeve FAKKT IM SH K							
Effective anchorage depth	h_{ef}	[mm]	50	50	50	85	
			100	100	100		
			-[1)]	200	200		
Max. Installation torque	max T_{inst}	[Nm]	5	15	15	3	5
General installation parameters							
Edge distance	c_{min}	[mm]	60				
Spacing	s_{min} ∥		80				
	s_{cr} ∥		3x h_{ef}				
	s_{min} ⊥		80				
	s_{cr} ⊥		3x h_{ef}				
Drilling method							
Hammer drilling with hard metal hammer drill							

Table C10.2: Group factors

Anchor rod			M8	M10	M12	-	
FAKKT Internal threaded sleeve			-	-	-	M6	M8
						11x85	
Group factor	$\alpha_{g,N}$ ∥	[-]	0,7				
	$\alpha_{g,V}$ ∥		1,3				
	$\alpha_{g,N}$ ⊥		2,0				
	$\alpha_{g,V}$ ⊥		2,0				

Injection mortar FAKKT IM Z for masonry

Performance
Solid sand-lime brick KS, NF, dimensions, installation parameters

Annex C 10

Electronic copy of the ETA by DIBt: ETA-22/0503

Solid sand-lime brick KS, NF, EN 771-2:2011+A1:2015

Table C11.1: Characteristic resistance under tension loading

Anchor rod		**M8**		**M10**			**M12**			**-**	
FAKKT Internal threaded sleeve		**-**		**-**			**-**			**M6**	**M8**
										11x85	
$N_{Rk} = N_{Rk,b} = N_{Rk,p}$ [kN] depending on the compressive strength f_b (temperature range 50/80°C)											
compressive strength f_b	use condition	Effective anchorage depth h_{ef} [mm]									
		50	100	50	100	200	50	100	200	85	
12 N/mm²	w/w w/d	2,5	4,5	2,5	3,5	7,0	2,5	3,0	6,5	2,5	
	d/d	4,0	8,0	4,0	5,5	12	4,0	4,5	12	4,0	
20 N/mm²	w/w w/d	3,5	6,5	3,5	4,5	10	3,5	4,0	9,5	3,5	
	d/d	6,0	11	6,0	8,0	12	6,0	6,5	12	6,0	

Table C11.2: Characteristic resistance under shear loading

Anchor rod		**M8**		**M10**		**M12**		**-**	
FAKKT Internal threaded sleeve		**-**		**-**		**-**		**M6**	**M8**
								11x85	
$V_{Rk} = V_{Rk,b} = V_{Rk,c}$ [kN] depending on the compressive strength f_b (temperature range 50/80°C)									
compressive strength f_b	use condition	Effective anchorage depth h_{ef} [mm]							
		50	100	50	≥100	50	≥100	85	
12 N/mm²	w/w w/d d/d	1,5	3,0	1,2	2,0	1,2	2,0	1,2	
20 N/mm²	w/w w/d d/d	2,5	4,0	1,5	3,0	1,5	3,0	1,5	

Factor for job site tests and displacements see annex C 27

Injection mortar FAKKT IM Z for masonry

Performance
Solid sand-lime brick KS, NF, Characteristic resistance under tension and shear loading

Annex C 11

Electronic copy of the ETA by DIBt: ETA-22/0503

Perforated sand-lime brick KSL, 3DF, EN 771-2:2011+A1:2015

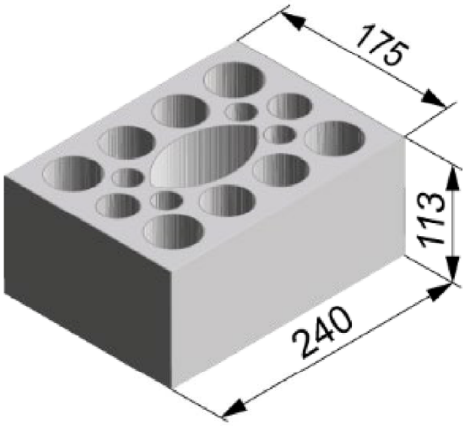

Perforated sand-lime brick KSL, 3DF, EN 771-2:2011+A1:2015			
Producer	e.g. KS Wemding		
Nominal dimensions [mm]	length L	width W	height H
	240	175	113
Density ρ [kg/dm³]	≥ 1,4		
Compressive strength f_b [N/mm²]	12; 20		
Standard	EN 771-2:2011+A1:2015		

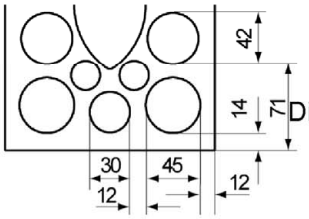

Dimension see also Annex B 11

Table C12.1: Installation parameters
(Pre-positioned anchorage with perforated sleeve SH K)

Anchor rod			**M8**	**-**		**M8**	**M10**	**M8**	**M10**	**-**		**M12**	**M12**
FAKKT Internal threaded sleeve			**-**	**M6**	**M8**	**-**		**-**		**M10**	**M12**	**-**	**-**
				11x85						**15x85**			
Perforated sleeve FAKKT IM SH K			**12x85**	**16x85**				**16x130**		**20x85**			**20x130**
Anchor rod and FAKKT Internal threaded sleeve with perforated sleeve FAKKT IM SH K													
Max. installation torque	max T_{inst}	[Nm]	2										
General installation parameters													
Edge distance	c_{min}	[mm]	60	80									
Spacing	s_{min} ∥	[mm]	100										
	s_{cr} ∥	[mm]	240										
	s_{min} ⊥	[mm]	115										
	s_{cr} ⊥	[mm]	115										
Drilling method													
Hammer drilling with hard metal hammer drill													

Table C12.2: Group factors

Anchor rod			**M8**	**-**		**M8**	**M10**	**M8**	**M10**	**-**		**M12**	**M12**
FAKKT Internal threaded sleeve			**-**	**M6**	**M8**	**-**		**-**		**M10**	**M12**	**-**	**-**
				11x85						**15x85**			
Perforated sleeve FAKKT IM SH K			**12x85**	**16x85**				**16x130**		**20x85**			**20x130**
Group factors	$\alpha_{g,N}$ ∥ = $\alpha_{g,V}$ ∥	[-]	1,5										
	$\alpha_{g,N}$ ⊥ = $\alpha_{g,V}$ ⊥	[-]	2,0										

Injection mortar FAKKT IM Z for masonry	**Annex C 12**
Performance Perforated sand-lime brick KSL, 3DF, dimensions, installation parameters	

Electronic copy of the ETA by DIBt: ETA-22/0503

Perforated sand-lime brick KSL, 3DF, EN 771-2:2011+A1:2015

Table C13.1: Characteristic resistance under tension loading (Pre-positioned anchorage)

Anchor rod		**M8**	**-**	**M8**	**M10**	**M8**	**M10**	**-**	**M12**	**M12**
FAKKT Internal threaded sleeve		**-**	**M6** / **M8** / **11x85**	**-**		**-**		**M10** / **M12** / **15x85**	**-**	**-**
Perforated sleeve FAKKT IM SH K		**12x85**	**16x85**			**16x130**		**20x85**		**20x130**
$N_{Rk} = N_{Rk,b} = N_{Rk,p}$ [kN] depending on the compressive strength f_b (temperature range 50/80°C)										
compressive strength f_b	use condition									
12 N/mm²	w/w w/d	2,5	2,5			3,0		3,0		3,0
	d/d	2,5	3,0			3,5		3,5		3,5
20 N/mm²	w/w w/d	4,0	4,5			5,5		5,5		5,5
	d/d	4,5	5,0			6,0		6,0		6,0

Table C13.1: Characteristic resistance under shear loading (Pre-positioned anchorage)

Anchor rod		**M8**	**-**	**M8**	**M10**	**M8**	**M10**	**-**	**M12**	**M12**
FAKKT Internal threaded sleeve		**-**	**M6** / **M8** / **11x85**	**-**		**-**		**M10** / **M12** / **15x85**	**-**	**-**
Perforated sleeve FAKKT IM SH K		**12x85**	**16x85**			**16x130**		**20x85**		**20x130**
$V_{Rk} = V_{Rk,b} = V_{Rk,c}$ [kN] depending on the compressive strength f_b (temperature range 50/80°C)										
compressive strength f_b	use condition									
12 N/mm²	w/w w/d / d/d	2,5			4,5					
20 N/mm²	w/w w/d / d/d	4,0	4,5	4,0	7,5					

Factor for job site tests and displacements see annex C 27

Injection mortar FAKKT IM Z for masonry

Performance
Perforated sand-lime brick KSL, 3DF, Characteristic resistance under tension loading

Annex C 13

Electronic copy of the ETA by DIBt: ETA-22/0503

Vertical perforated brick HLz, EN 771-1:2011+A1:2015

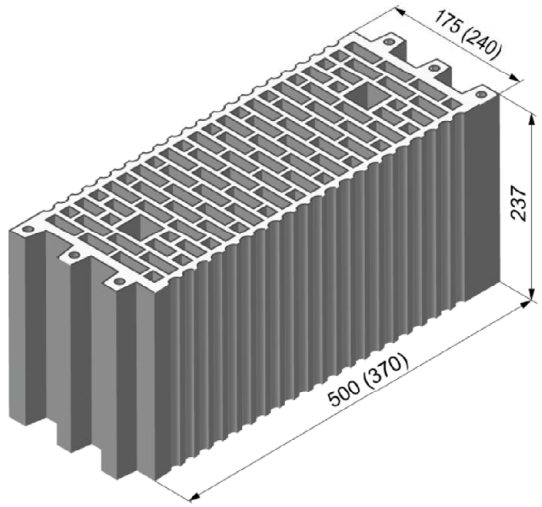

Vertical perforated brick HLz, EN 771-1:2011+A1:2015			
Producer	e.g. Wienerberger, Poroton		
Nominal dimensions [mm]	length L	width W	height H
	500	175	237
	370	240	237
Density ρ [kg/dm³]	≥ 1,0		
Compressive strength f_b [N/mm²]	10		
Standard	EN 771-1:2011+A1:2015		

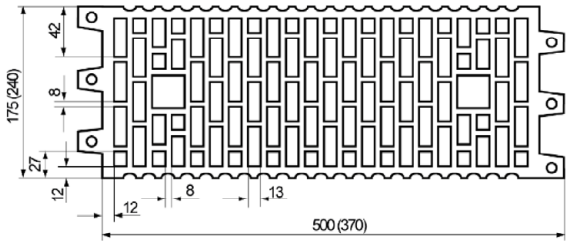

Dimension see also Annex B 11

Table C14.1: Installation parameters

Anchor rod	M8	-		M8	M10	M8	M10	-		M12	M12
FAKKT Internal threaded sleeve	-	M6	M8	-		-		M10	M12	-	-
		11x85						15x85			
Perforated sleeve FAKKT IM SH K	12x85	16x85				16x130		20x85			20x130

Anchor rod and FAKKT Internal threaded sleeve with perforated sleeve FAKKT IM SH K			
Max. installation torque	max T_{inst}	[Nm]	2

General installation parameters			
Edge distance	c_{min}	[mm]	100
Spacing	s_{min} ∥		100
	s_{cr} ∥		500 (370)
	s_{min} ⊥		100
	s_{cr} ⊥		240

Drilling method
Hammer drilling with hard metal hammer drill

Table C14.2: Group factors

Anchor rod	M8	-		M8	M10	M8	M10	-		M12	M12
FAKKT Internal threaded sleeve	-	M6	M8	-		-		M10	M12	-	-
		11x85						15x85			
Perforated sleeve FAKKT IM SH K	12x85	16x85				16x130		20x85			20x130

Group-factor	$\alpha_{g,N}$ ∥ = $\alpha_{g,V}$ ∥ / $\alpha_{g,N}$ ⊥ = $\alpha_{g,V}$ ⊥	[-]	1

Injection mortar FAKKT IM Z for masonry

Performance
Vertical perforated brick HLz, dimensions, installation parameters

Annex C 14

Electronic copy of the ETA by DIBt: ETA-22/0503

Vertical perforated brick HLz, EN 771-1:2011+A1:2015

Table C15.1: Characteristic resistance under tension loading

Anchor rod	**M8**	**-**	**M8**	**M10**	**M8**	**M10**	**-**	**M12**	**M12**
FAKKT Internal threaded sleeve	-	**M6** / **M8** **11x85**	-		-		**M10** / **M12** **15x85**	-	-
Perforated sleeve FAKKT IM SH K	**12x85**	**16x85**			**16x130**		**20x85**		**20x130**

$N_{Rk} = N_{Rk,b} = N_{Rk,p}$ [kN] depending on the compressive strength f_b (temperature range 50/80°C)					
compressive strength f_b	use condition				
10 N/mm²	w/w	w/d	0,9	2,5	3,0
	d/d		0,9	2,5	3,5

Table C15.2: Characteristic resistance under shear loading

Anchor rod	**M8**	**-**	**M8**	**M10**	**M8**	**M10**	**-**	**M12**	**M12**
FAKKT Internal threaded sleeve	-	**M6** / **M8** **11x85**	-		-		**M10** / **M12** **15x85**	-	-
Perforated sleeve FAKKT IM SH K	**12x85**	**16x85**			**16x130**		**20x85**		**20x130**

$V_{Rk} = V_{Rk,b} = V_{Rk,c}$ [kN] depending on the compressive strength f_b (temperature range 50/80°C)						
compressive strength f_b	use condition					
10 N/mm²	w/w	w/d	1,2	1,5	1,2	1,5
	d/d					

Factor for job site tests and displacements see annex C 27

Injection mortar FAKKT IM Z for masonry

Performance
Vertical perforated brick HLz, Characteristic resistance under tension and shear loading

Annex C 15

Electronic copy of the ETA by DIBt: ETA-22/0503

Vertical perforated brick HLz, 2DF, EN 771-1:2011+A1:2015

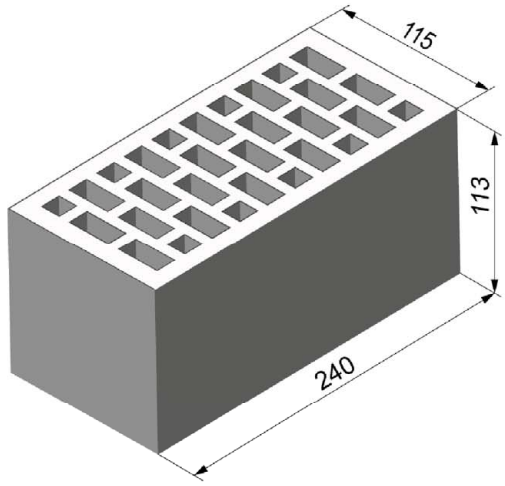

Vertical perforated brick HLz, 2DF, EN 771-1:2011+A1:2015			
Producer	e.g. Wienerberger		
Nominal dimensions [mm]	length L	width W	height H
	240	115	113
Density ρ [kg/dm³]	≥ 1,4		
Compressive strength f_b [N/mm²]	20		
Standard	EN 771-1:2011+A1:2015		

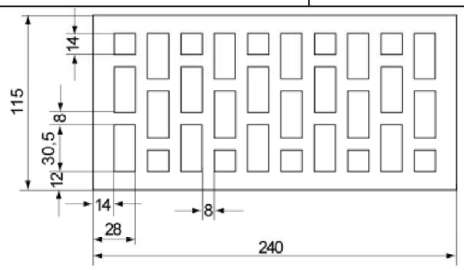

Dimension see also Annex B 11

Table C16.1: Installation parameters

Anchor rod	**M8**	**-**		**M8**	**M10**	**-**		**M12**
FAKKT Internal threaded sleeve	**-**	**M6**	**M8**	**-**		**M10**	**M12**	**-**
		11x85				**15x85**		
Perforated sleeve FAKKT IM SH K	**12x85**	**16x85**				**20x85**		

Anchor rod and FAKKT Internal threaded sleeve with perforated sleeve SH K			
Max. installation torque	max T_{inst}	[Nm]	2
General installation parameters			
Edge distance	c_{min}	[mm]	80
Spacing	s_{cr} ∥ = s_{min} ∥		240
	s_{cr} ⊥ = s_{min} ⊥		115
Drilling method			
Hammer drilling with hard metal hammer drill			

Table C16.2: Group factors

Anchor rod	**M8**	**-**		**M8**	**M10**	**-**		**M12**
FAKKT Internal threaded sleeve	**-**	**M6**	**M8**	**-**		**M10**	**M12**	**-**
		11x85				**15x85**		
Perforated sleeve FAKKT IM SH K	**12x85**	**16x85**				**20x85**		

Group factors	$\alpha_{g,N}$ ∥	[-]	2
	$\alpha_{g,V}$ ∥		
	$\alpha_{g,N}$ ⊥		
	$\alpha_{g,V}$ ⊥		

Injection mortar FAKKT IM Z for masonry	**Annex C 16**
Performance Vertical perforated brick HLz, 2DF, dimensions, installation parameters	

Electronic copy of the ETA by DIBt: ETA-22/0503

Vertical perforated brick HLz, 2DF, EN 771-1:2011+A1:2015

Table C17.1: Characteristic resistance under tension loading

Anchor rod		**M8**	**-**		**M8**	**M10**	**-**		**M12**
FAKKT Internal threaded sleeve		**-**	**M6**	**M8**	**-**		**M10**	**M12**	**-**
			11x85				**15x85**		
Perforated sleeve FAKKT IM SH K		**12x85**	**16x85**				**20x85**		
$N_{Rk} = N_{Rk,b} = N_{Rk,p}$ [kN] depending on the compressive strength f_b (temperature range 50/80°C)									
compressive strength f_b	use condition								
20 N/mm²	w/w w/d	3,5	2,5				3,0		
	d/d	4,0	2,5				3,0		

Table C17.2: Characteristic resistance under shear loading

Anchor rod		**M8**	**-**		**M8**	**M10**	**-**		**M12**
FAKKT Internal threaded sleeve		**-**	**M6**	**M8**	**-**		**M10**	**M12**	**-**
			11x85				**15x85**		
Perforated sleeve FAKKT IM SH K		**12x85**	**16x85**				**20x85**		
$V_{Rk} = V_{Rk,b} = V_{Rk,c}$ [kN] depending on the compressive strength f_b (temperature range 50/80°C)									
compressive strength f_b	use condition								
20 N/mm²	w/w w/d	7,5	4,0	4,5			8,5		
	d/d								

Factor for job site tests and displacements see annex C 27

Injection mortar FAKKT IM Z for masonry

Performance
Vertical perforated brick HLz, 2DF,
Characteristic resistance under tension and shear loading

Annex C 17

Electronic copy of the ETA by DIBt: ETA-22/0503

Vertical perforated brick HLz, T10, T11, EN 771-1:2011+A1:2015

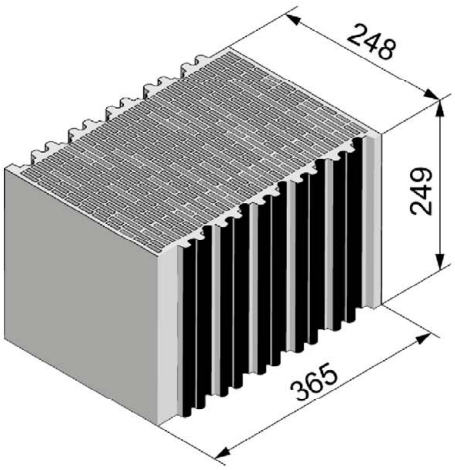

Vertical perforated brick HLz, T10, T11, EN 771-1:2011+A1:2015			
Producer	-		
Nominal dimensions [mm]	length L	width W	height H
	248	365	249
Density ρ [kg/dm³]	0,7		
Compressive strength f_b [N/mm²]	8; 10; 12		
Standard	EN 771-1:2011+A1:2015		

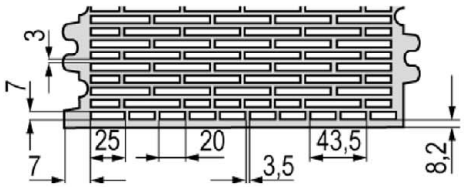

Dimension see also Annex B 11

Table C18.1: Installation parameters
(Pre-positioned anchorage with perforated sleeve FAKKT IM SH K)

Anchor rod			**M8**	**-**		**M8**	**M10**	**M8**	**M10**	**-**		**M12**	**M12**	**M12**
FAKKT Internal threaded sleeve			**-**	**M6**	**M8**	**-**		**-**		**M10**	**M12**	**-**	**-**	**-**
				11x85						**15x85**				
Perfor. sleeve FAKKT IM SH K			**12x85**	**16x85**				**16x130**		**20x85**			**20x130**	**20x200**
Anchor rod and FAKKT Internal threaded sleeve with perforated sleeve FAKKT IM SH K														
Max. installation torque	max T_{inst}	[Nm]	3				5	3	5					
General installation parameters														
Edge distance	c_{min}	[mm]	60											
Spacing	s_{min} ∥	[mm]	80											
	s_{cr} ∥	[mm]	250											
	s_{min} ⊥	[mm]	80											
	s_{cr} ⊥	[mm]	250											
Drilling method														
Rotary drilling with carbide drill														

Table C18.2: Group factors

Anchor rod			**M8**	**-**		**M8**	**M10**	**M8**	**M10**	**-**		**M12**	**M12**	**M12**
FAKKT Internal threaded sleeve			**-**	**M6**	**M8**	**-**		**-**		**M10**	**M12**	**-**	**-**	**-**
				11x85						**15x85**				
Perfor. sleeve FAKKT IM SH K			**12x85**	**16x85**				**16x130**		**20x85**			**20x130**	**20x200**
Group factors	$\alpha_{g,N}$ ∥	[-]	1,7											
	$\alpha_{g,V}$ ∥	[-]	0,5											
	$\alpha_{g,N}$ ⊥	[-]	1,3											
	$\alpha_{g,V}$ ⊥	[-]	0,5											

Injection mortar FAKKT IM Z for masonry

Performance
Vertical perforated brick HLz, T10, T11, dimensions, installation parameters

Annex C 18

Electronic copy of the ETA by DIBt: ETA-22/0503

Vertical perforated brick HLz, T10, T11, EN 771-1:2011+A1:2015

Table C19.1: Characteristic resistance under tension loading (Pre-positioned anchorage)

Anchor rod	**M8**	**-**	**M8**	**M10**	**M8**	**M10**	**-**	**M12**	**M12**	**M12**
FAKKT Internal threaded sleeve	-	**M6** / **M8**	-		-		**M10** / **M12**	-	-	-
		11x85					**15x85**			
Perforated sleeve FAKKT IM SH K	**12x85**	**16x85**			**16x130**		**20x85**		**20x130**	**20x200**

$N_{Rk} = N_{Rk,b} = N_{Rk,p}$ [kN] depending on the compressive strength f_b (temperature range 50/80°C)			
compressive strength f_b	use condition		
8 N/mm²	w/w	w/d	1,5
	d/d		2,0
10 N/mm²	w/w	w/d	2,0
	d/d		2,0
12 N/mm²	w/w	w/d	2,0
	d/d		2,5

Factor for job site tests and displacements see annex C 27

Table C19.2: Characteristic resistance under shear loading (Pre-positioned anchorage)

Anchor rod	**M8**	**-**	**M8**	**M8**	**-**	**M12**	**M12**	**M12**
FAKKT Internal threaded sleeve	-	**M6** / **M8**	-	-	**M10** / **M12**	-	-	-
		11x85			**15x85**			
Perforated sleeve FAKKT IM SH K	**12x85**	**16x85**		**16x130**	**20x85**		**20x130**	**20x200**

$V_{Rk} = V_{Rk,b} = V_{Rk,c}$ [kN] depending on the compressive strength f_b (temperature range 50/80°C)					
compressive strength f_b	use condition				
8 N/mm²	w/w	w/d	0,9	1,5	2,0
	d/d				
10 N/mm²	w/w	w/d	0,9	1,5	2,0
	d/d				
12 N/mm²	w/w	w/d	1,2	2,0	2,0
	d/d				

Factor for job site tests and displacements see annex C 27

Injection mortar FAKKT IM Z for masonry	**Annex C 19**
Performance Vertical perforated brick HLz, T10, T11, Characteristic resistance under tension and shear loading	

Electronic copy of the ETA by DIBt: ETA-22/0503

Vertical perforated brick HLz, FZ 7, filled with mineral wool, EN 771-1:2015

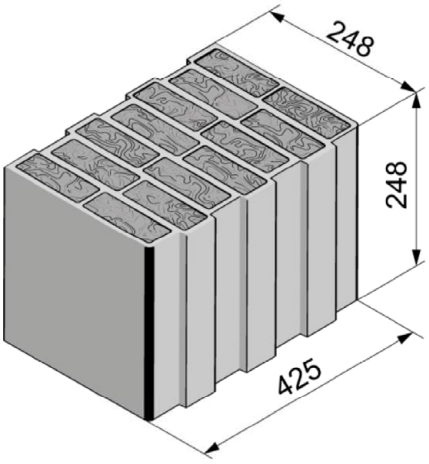

Vertical perforated brick HLz, FZ 7, filled with mineral wool, EN 771-1:2011+A1:2015			
Producer	-		
Nominal dimensions [mm]	length L	width W	height H
	248	425	248
Density ρ [kg/dm³]	0,6		
Compressive strength f_b [N/mm²]	4; 6; 8		
Standard	EN 771-1:2011+A1:2015		

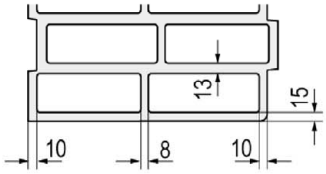

Dimension see also Annex B 12

Table C20.1: Installation parameters
(Pre-positioned anchorage with perforated sleeve FAKKT IM SH K)

Anchor rod	**M8**	**-**	**M8**	**M10**	**M8**	**M10**	**-**	**M12**	**M12**	**M12**
FAKKT Internal threaded sleeve	-	**M6** / **M8**	-		-		**M10** / **M12**	-	-	-
		11x85					**15x85**			
Perfor. sleeve FAKKT IM SH K	**12x85**	**16x85**			**16x130**		**20x85**		**20x130**	**20x200**
Anchor rod and FAKKT Internal threaded sleeve with perforated sleeve FAKKT IM SH K										
Max. installation torque max T_{inst} [Nm]	2			5	2		5			
General installation parameters										
Edge distance c_{min} [mm]	60									
Spacing s_{min} ∥ [mm]	80									
Spacing s_{cr} ∥ [mm]	250									
Spacing s_{min} ⊥ [mm]	80									
Spacing s_{cr} ⊥ [mm]	250									
Drilling method										
Rotary drilling with carbide drill										

Table C20.2: Group factors

Anchor rod	**M8**	**-**	**M8**	**M10**	**M8**	**M10**	**-**	**M12**	**M12**	**M12**
FAKKT Internal threaded sleeve	-	**M6** / **M8**	-		-		**M10** / **M12**	-	-	-
		11x85					**15x85**			
Perfor. sleeve FAKKT IM SH K	**12x85**	**16x85**			**16x130**		**20x85**		**20x130**	**20x200**
Group factor $\alpha_{g,N}$ ∥ [-]	1,9									
Group factor $\alpha_{g,V}$ ∥ [-]	0,9									
Group factor $\alpha_{g,N}$ ⊥ [-]	1,0									
Group factor $\alpha_{g,V}$ ⊥ [-]	0,7									

Injection mortar FAKKT IM Z for masonry

Performance
Vertical perforated brick HLz, FZ 7, filled with mineral wool;
dimensions, installation parameters

Annex C 20

Electronic copy of the ETA by DIBt: ETA-22/0503

Vertical perforated brick HLz, FZ 7, filled with mineral wool, EN 771-1:2011+A1:2015

Table C21.1: Characteristic resistance under tension loading (Pre-positioned anchorage)

Anchor rod		**M8**	**-**	**M8**	**M10**	**M8**	**M10**	**-**	**M12**	**M12**	**M12**
FAKKT Internal threaded sleeve		**-**	**M6** / **M8** / **11x85**	**-**		**-**		**M10** / **M12** / **15x85**	**-**	**-**	**-**
Perforated sleeve FAKKT IM SH K		**12x85**	**16x85**			**16x130**		**20x85**		**20x130**	**20x200**
$N_{Rk} = N_{Rk,b} = N_{Rk,p}$ [kN] depending on the compressive strength f_b (temperature range 50/80°C)											
compressive strength f_b	use condition										
4 N/mm²	w/w w/d	0,75	1,5			2,0		1,2		2,0	2,0
	d/d	0,9	1,5			2,0		1,5		2,0	2,5
6 N/mm²	w/w w/d	0,9	1,5			2,0		1,5		2,5	2,5
	d/d	0,9	2,0			2,5		2,0		2,5	3,0
8 N/mm²	w/w w/d	1,2	2,0			2,5		2,0		2,5	3,0
	d/d	1,2	2,0			3,0		2,0		3,0	3,5

Factor for job site tests and displacements see annex C 27

Table C21.1: Characteristic resistance under shear loading (Pre-positioned anchorage)

Anchor rod		**M8**	**-**	**M8**	**M8**	**-**	**M12**	**M12**	**M12**
FAKKT Internal threaded sleeve		**-**	**M6** / **M8** / **11x85**	**-**	**-**	**M10** / **M12** / **15x85**	**-**	**-**	**-**
Perforated sleeve FAKKT IM SH K		**12x85**	**16x85**		**16x130**	**20x85**		**20x130**	**20x200**
$V_{Rk} = V_{Rk,b} = V_{Rk,c}$ [kN] depending on the compressive strength f_b (temperature range 50/80°C)									
compressive strength f_b	use condition								
4 N/mm²	w/w w/d d/d	1,5							1,5
6 N/mm²	w/w w/d d/d	2,0							1,5
8 N/mm²	w/w w/d d/d	2,5							2,0

Factor for job site tests and displacements see annex C 27

Injection mortar FAKKT IM Z for masonry

Performance
Vertical perforated brick HLz, FZ 7, filled with mineral wool;
Characteristic resistance under tension and shear loading

Annex C 21

Electronic copy of the ETA by DIBt: ETA-22/0503

Light-weight concrete hollow block Hbl, EN 771-3:2011+A1:2015

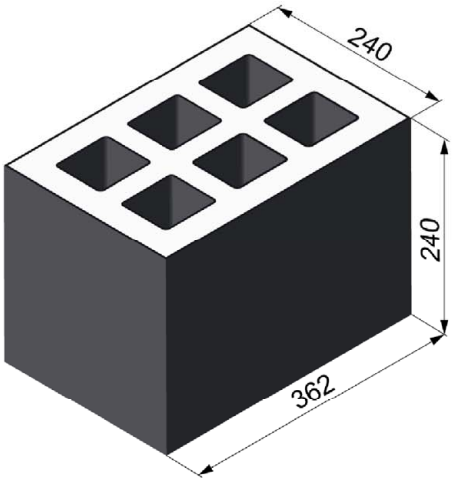

Light-weight concrete hollow block Hbl, EN 771-3:2011+A1:2015			
Producer	-		
Nominal dimensions [mm]	length L	width W	height H
	362	240	240
Density ρ [kg/dm³]	≥ 1,0		
Compressive strength f_b [N/mm²]	4		
Standard	EN 771-3:2011+A1:2015		

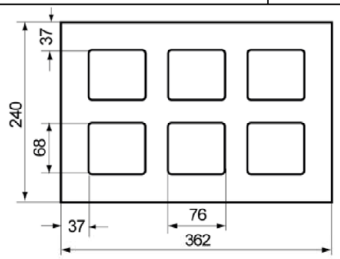

Dimension see also Annex B 12

Table C22.1: Installation parameters
(Pre-positioned anchorage with perforated sleeve SH-K)

Anchor rod	**M8**	**-**	**M8**	**M10**	**M8**	**M10**	**-**	**M12**	**M12**
FAKKT Internal threaded sleeve	**-**	**M6** / **M8**	**-**		**-**		**M10** / **M12**	**-**	**-**
		11x85					**15x85**		
Perforated sleeve SH K	**12x85**	**16x85**			**16x130**		**20x85**		**20x130**

	Anchor rod and FAKKT Internal threaded sleeve with perforated sleeve SH K		
Max. installation torque	max T_{inst}	[Nm]	2
	General installation parameters		
Edge distance	c_{min}	[mm]	60
Spacing	s_{min} ∥	[mm]	100
	s_{cr} ∥	[mm]	362
	s_{min} ⊥ = s_{cr} ⊥	[mm]	240
	Drilling method		
	Hammer drilling with hard metal hammer drill		

Table C22.2: Group factors

Anchor rod	**M8**	**-**	**M8**	**M10**	**M8**	**M10**	**-**	**M12**	**M12**
FAKKT Internal threaded sleeve	**-**	**M6** / **M8**	**-**		**-**		**M10** / **M12**	**-**	**-**
		11x85					**15x85**		
Perforated sleeve SH K	**12x85**	**16x85**			**16x130**		**20x85**		**20x130**

Group factors	$\alpha_{g,N}$ ∥	[-]	1,2
	$\alpha_{g,V}$ ∥	[-]	1,1
	$\alpha_{g,N}$ ⊥	[-]	2,0
	$\alpha_{g,V}$ ⊥	[-]	

Injection mortar FAKKT IM Z for masonry

Performance
Light-weight concrete hollow block Hbl, dimensions, installation parameters

Annex C 22

Electronic copy of the ETA by DIBt: ETA-22/0503

Light-weight concrete hollow block Hbl, EN 771-3:2011+A1:2015

Table C23.1: Characteristic resistance under tension loading (Pre-positioned anchorage)

Anchor rod	**M8**	**-**	**M8**	**M10**	**M8**	**M10**	**-**	**M12**	**M12**
FAKKT Internal threaded sleeve	-	**M6** / **M8**	-		-		**M10** / **M12**	-	-
		11x85					**15x85**		
Perforated sleeve FAKKT IM SH K	**12x85**	**16x85**			**16x130**		**20x85**		**20x130**

$N_{Rk} = N_{Rk,b} = N_{Rk,p}$ [kN] depending on the compressive strength f_b (temperature range 50/80°C)			
compressive strength f_b	use condition		
4 N/mm²	w/w	w/d	3,0
	d/d		3,0

Table C23.2: Characteristic resistance under shear loading (Pre-positioned anchorage)

Anchor rod	**M8**	**-**	**M8**	**M10**	**M8**	**M10**	**-**	**M12**	**M12**
FAKKT Internal threaded sleeve	-	**M6** / **M8**	-		-		**M10** / **M12**	-	-
		11x85					**15x85**		
Perforated sleeve FAKKT IM SH K	**12x85**	**16x85**			**16x130**		**20x85**		**20x130**

$V_{Rk} = V_{Rk,b} = V_{Rk,c}$ [kN] depending on the compressive strength f_b (temperature range 50/80°C)			
compressive strength f_b	use condition		
4 N/mm²	w/w	w/d	2,0
	d/d		

Factor for job site tests and displacements see annex C 27

Electronic copy of the ETA by DIBt: ETA-22/0503

Autoclaved aerated concrete, EN 771-4:2011+A1:2015

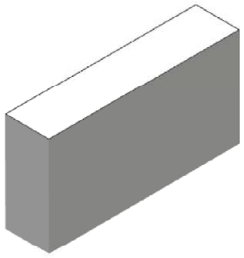

Autoclaved aerated concrete, EN 771-4:2011+A1:2015				
Producer		e.g. Ytong		
Density ρ	[kg/dm³]	0,35	0,5	0,65
Compressive strength f_b	[N/mm²]	2	4	6
Standard		EN 771-4:2011+A1:2015		

Table C24.1: Installation parameters

Anchor rod			**M8**		**M10**		**M12**		-		-	
FAKKT Internal threaded sleeve			-		-		-		**M6**	**M8**	**M10**	**M12**
									11x85		**15x85**	
Anchor rod and FAKKT Internal threaded sleeve without perforated sleeve												
Effective anchorage depth	h_{ef}	[mm]	100	200	100	200	100	200	85			
Max. installation torque	max T_{inst}	[Nm]	1	8	2	12	2	16	1		2	
General installation parameters												
Edge distance	c_{min}	[mm]	100									
Spacing	s_{cr} ll = s_{min} ll	[mm]	250									
	h_{ef}=200mm s_{min} ll	[mm]	80									
	h_{ef}=200mm s_{cr} ll	[mm]	3x h_{ef}									
	s_{cr} ⊥ = s_{min} ⊥	[mm]	250									
	h_{ef}=200mm s_{min}⊥	[mm]	80									
	h_{ef}=200mm s_{cr} ⊥	[mm]	3x h_{ef}									
Drilling method												
Hammer drilling with hard metal hammer drill												

Injection mortar FAKKT IM Z for masonry

Performance
Autoclaved aerated concrete, dimensions, installation parameters

Annex C 24

Electronic copy of the ETA by DIBt: ETA-22/0503

Table C25.1: Group factors for autoclaved aerated concrete (Compressive strength f_b =2 N/mm²)

Anchor rod			**M8**	**M10**	**M12**	**-**		**-**	
FAKKT Internal threaded sleeve			**-**	**-**	**-**	**M6**	**M8**	**M10**	**M12**
						11x85		**15x85**	
Group factors	h_{ef}=200 $\alpha_{g,N}$ II	[-]	1,6			-[1]		-[1]	
	h_{ef}=200 $\alpha_{g,V}$ II		1,1			-[1]		-[1]	
	$\alpha_{g,N}$ II, $\alpha_{g,V}$ II		2						
	h_{ef}=200 $\alpha_{g,N}\perp$		1,6			-[1]		-[1]	
	h_{ef}=200 $\alpha_{g,V}\perp$		0,8			-[1]		-[1]	
	$\alpha_{g,N}\perp$, $\alpha_{g,V}\perp$		2						

[1] No performance assessed

Table C25.2: Group factors for autoclaved aerated concrete (Compressive strength f_b =4 N/mm²)

Anchor rod			**M8**	**M10**	**M12**	**-**		**-**	
FAKKT Internal threaded sleeve			**-**	**-**	**-**	**M6**	**M8**	**M10**	**M12**
						11x85		**15x85**	
Group factors	h_{ef}=200 $\alpha_{g,N}$ II	[-]	0,7			-[1]		-[1]	
	h_{ef}=200 α_{gV} II		2,0			-[1]		-[1]	
	$\alpha_{g,N}$ II, α_{gV} II		2						
	h_{ef}=200 $\alpha_{g,N}\perp$		0,7			-[1]		-[1]	
	h_{ef}=200 $\alpha_{g,V}\perp$		1,2			-[1]		-[1]	
	$\alpha_{g,N}\perp$, $\alpha_{gV}\perp$		2						

[1] No performance assessed

Table C25.3: Group factors for autoclaved aerated concrete (Compressive strength f_b =6 N/mm²)

Anchor rod			**M8**	**M10**	**M12**	**-**		**-**	
FAKKT Internal threaded sleeve			**-**	**-**	**-**	**M6**	**M8**	**M10**	**M12**
						11x85		**15x85**	
Group factors	h_{ef}=200 $\alpha_{g,N}$ II	[-]	0,7			-[1]		-[1]	
	h_{ef}=200 $\alpha_{g,V}$ II		2,0			-[1]		-[1]	
	$\alpha_{g,N}$ II, $\alpha_{g,V}$ II		2						
	h_{ef}=200 $\alpha_{g,N}\perp$		0,7			-[1]		-[1]	
	h_{ef}=200 $\alpha_{g,V}\perp$		1,2			-[1]		-[1]	
	$\alpha_{g,N}\perp$, $\alpha_{g,V}\perp$		2						

[1] No performance assessed

Electronic copy of the ETA by DIBt: ETA-22/0503

Autoclaved aerated concrete, EN 771-4:2011+A1:2015

Table C26.1: Characteristic resistance under tension loading

Anchor rod			M8		M10		M12		-		-	
FAKKT Internal threaded sleeve			-		-		-		M6	M8	M10	M12
									11x85		15x85	
$N_{Rk} = N_{Rk,b} = N_{Rk,p}$ [kN] depending on the compressive strength f_b (temperature range 50/80°C)												
compressive strength f_b	use condition		Effective anchorage depth h_{ef} [mm]									
			100	200	100	200	100	200	85			
2 N/mm²	w/w	w/d	1,5	2,0	1,5	3,0	1,5	3,0	1,5		1,5	
	d/d		1,5	3,0	1,5	3,5	2,0	4,0	1,5		1,5	
4 N/mm²	w/w	w/d	2,0	1,5	2,5	3,5	2,5	3,5	2,0		1,5	
	d/d		2,0	3,0	3,0	5,0	2,5	5,0	2,0		1,5	
6 N/mm²	w/w	w/d	3,0	2,5	4,5	5,0	4,5	7,0	3,5		2,5	
	d/d		3,5	4,0	5,0	7,0	5,0	9,0	3,5		2,5	

Table C26.2: Characteristic resistance under shear loading

Anchor rod			M8		M10		M12		-		-	
FAKKT Internal threaded sleeve			-		-		-		M6	M8	M10	M12
									11x85		15x85	
$V_{Rk} = V_{Rk,b} = V_{Rk,c}$ [kN] depending on the compressive strength f_b (temperature range 50/80°C)												
compressive strength f_b	use condition		Effective anchorage depth h_{ef} [mm]									
			100	200	100	200	100	200	85			
2 N/mm²	w/w	w/d	1,2	1,2	1,2	1,2	1,5	1,2	1,2			1,5
	d/d											
4 N/mm²	w/w	w/d	2,5	2,0	2,0	2,0	2,5	2,0	2,0			2,5
	d/d											
6 N/mm²	w/w	w/d	3,0	2,5	3,0	3,0	3,5	4,0	2,5			3,5
	d/d											

Factor for job site tests and displacements see annex C 27

Electronic copy of the ETA by DIBt: ETA-22/0503

β-factors for job site tests; displacements

Table C27.1: β-factors for job site tests

use condition		w/w and w/d	d/d
temperature range		50/80	50/80
Material	Size		
solid units	M8	0,57	0,96
	M10	0,59	
	M12 FAKKT Internal threaded sleeve 11x85	0,60	
	FAKKT Internal threaded sleeve 15x85	0,62	
	FAKKT IM SH 16x85 K	0,55	
hollow units	all sizes	0,86	0,96
Autoclaved aerated concrete cylindrical drill hole	all sizes	0,73	0,81

Table C27.2: Displacements

Material	N [kN]	δN_0 [mm]	δN_∞ [mm]	V [kN]	δV_0 [mm]	δV_∞ [mm]
solid units and autoclaved aerated concrete h_{ef}=100mm	$\frac{N_{Rk}}{1,4 * \gamma_{Mm}}$	0,03	0,06	$\frac{V_{Rk}}{1,4 * \gamma_{Mm}}$	0,82	0,88
hollow units	$\frac{N_{Rk}}{1,4 * \gamma_{Mm}}$	0,48	0,96	$\frac{V_{Rk}}{1,4 * \gamma_{Mm}}$	1,71	2,56
solid brick Mz NF annex C 4 - C 7	$\frac{N_{Rk}}{1,4 * \gamma_{Mm}}$	0,74	1,48	$\frac{V_{Rk}}{1,4 * \gamma_{Mm}}$	1,23	1,85
solid brick KS NF annex C 14 / C 15	$\frac{N_{Rk}}{1,4 * \gamma_{Mm}}$	0,20	0,40	$\frac{V_{Rk}}{1,4 * \gamma_{Mm}}$	0,91	1,37
AAC h_{ef}=200 mm annex C 30 - C 33	$\frac{N_{Rk}}{1,4 * \gamma_{Mm}}$	1,03	2,06	$\frac{V_{Rk}}{1,4 * \gamma_{Mm}}$	1,25	1,88

For anchorage in autoclaved aerated concrete, the partial factor γ_{MAAC} shall be used instead of γ_{Mm}.

Electronic copy of the ETA by DIBt: ETA-22/0503