Deutsches Institut für Bautechnik DIBt

Member of EOTA
www.eota.eu

Public-law institution jointly founded by the federal states and the Federation

European Technical Assessment Body for construction products

Designated according to Article 29 of Regulation (EU) No 305/2011 and member of EOTA (European Organisation for Technical Assessment)

European Technical Assessment

ETA-25/1067 of 14 November 2025

English translation prepared by DIBt - Original version in German language

General Part

Technical Assessment Body issuing the European Technical Assessment:	Deutsches Institut für Bautechnik
Trade name of the construction product	OMER staples d=1,53 mm, d=1,80 mm, d=2,00 mm
Product family to which the construction product belongs	Dowel-type fasteners with resin coating
Manufacturer	Omer S.p.A. Via Foresto 42 31058 SUSEGANA (TV) ITALY
Manufacturing plant	Plant 1
This European Technical Assessment contains	12 pages including 3 annexes which form an integral part of this assessment
This European Technical Assessment is issued in accordance with Regulation (EU) No 305/2011, on the basis of	EAD 130019-00-0603

The European Technical Assessment is issued by the Technical Assessment Body in its official language. Translations of this European Technical Assessment in other languages shall fully correspond to the original issued document and shall be identified as such.

Communication of this European Technical Assessment, including transmission by electronic means, shall be in full. However, partial reproduction may only be made with the written consent of the issuing Technical Assessment Body. Any partial reproduction shall be identified as such.

This European Technical Assessment may be withdrawn by the issuing Technical Assessment Body, in particular pursuant to information by the Commission in accordance with Article 25(3) of Regulation (EU) No 305/2011.

Specific Part

1 Technical description of the product

OMER staples d=1,53mm, d=1,80mm, d=2,00mm are dowel type fasteners made of non-alloy steel rods according to EN ISO 16120 or made of stainless steel drawn from austenitic steel rods in accordance with EN 10088-1 for timber constructions. The staples have a special resin coating with a minimum length of 50 % of the legs.

The diameters of the staple legs are d = 1,53 mm ± 0,025 mm, d = 1,80 mm ± 0,03 mm and d = 2,00 mm ± 0,03 mm. Further dimensions are shown in Annex 1.

2 Specification of the intended use in accordance with the applicable European Assessment Document

The performances given in Section 3 are only valid if the OMER staples d=1,53mm, d=1,80mm, d=2,00mm are used in compliance with the specifications and conditions given in Annex 1 to 3.

The verifications and assessment methods on which this European Technical Assessment is based lead to the assumption of a working life of staples of at least 50 years. The indications given on the working life cannot be interpreted as a guarantee given by the producer, but are to be regarded only as a means for choosing the right products in relation to the expected economically reasonable working life of the works.

3 Performance of the product and references to the methods used for its assessment

3.1 Mechanical resistance and stability (BWR 1)

Essential characteristic	Performance
Dimensions	See Annex 1
Characteristic yield moment	See Annex 3
Withdrawal capacity for short-term and medium-term loads	See Annex 3
Withdrawal capacity for long term and permanent loads	See Annex 3
Characteristic head pull-through parameter	See Annex 3
Minimum tensile strength of the wire	See Annex 3
Minimum and maximum thickness of the connected material	See Annex 3
Durability against corrosion	See Annex 2
Durability of the resin coating	See Annex 2

3.2 Safety in case of fire (BWR 2)

Essential characteristic	Performance
Reaction to fire	Euroclass A1

3.3 Safety and accessibility in use (BWR 4)

The essential characteristics of BWR 4 have been covered by BWR 1.

4 Assessment and verification of constancy of performance (AVCP) system applied, with reference to its legal base

In accordance with EAD No.130019-00-0603, the applicable European legal act is: [1997/176/EC(EU)].

The system to be applied is: 3

5 Technical details necessary for the implementation of the AVCP system, as provided for in the applicable EAD

Technical details necessary for the implementation of the AVCP system are laid down in the control plan deposited with Deutsches Institut für Bautechnik.

Issued in Berlin on 14 November 2025 by Deutsches Institut für Bautechnik

Anja Dewitt
Head of Section

beglaubigt:
Vössing

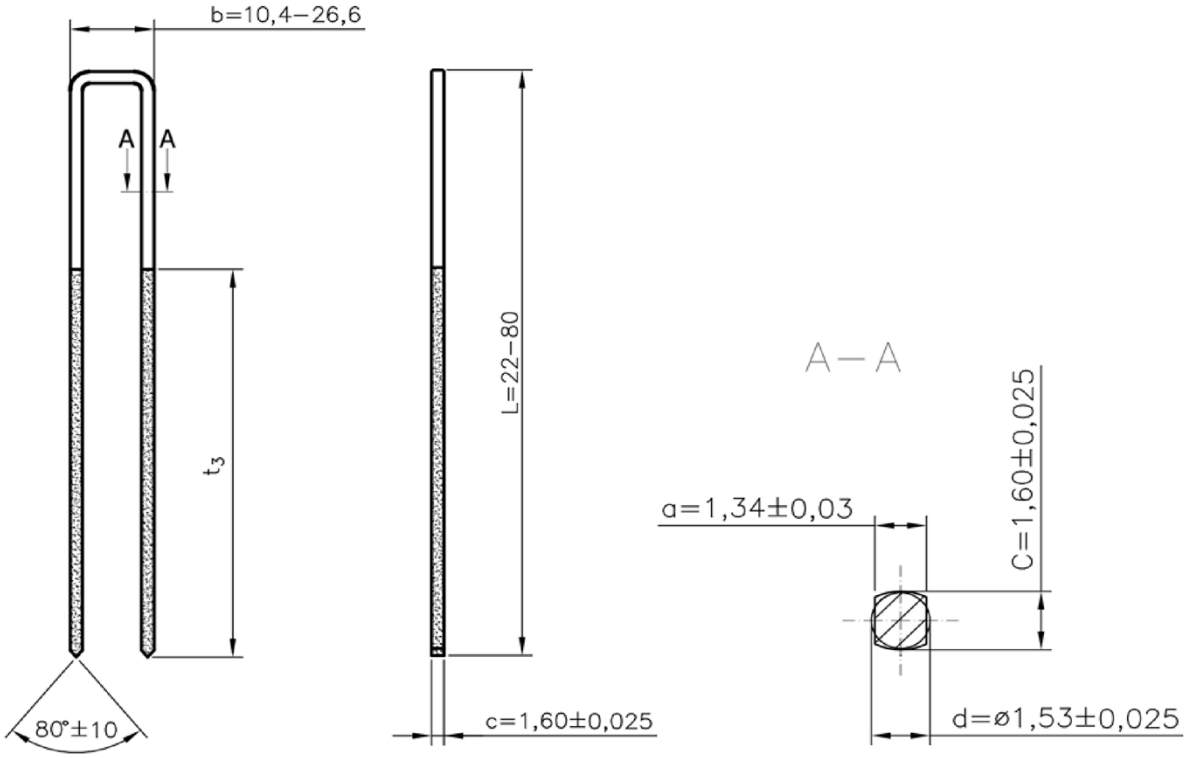

ALTERNATIVE POINTS

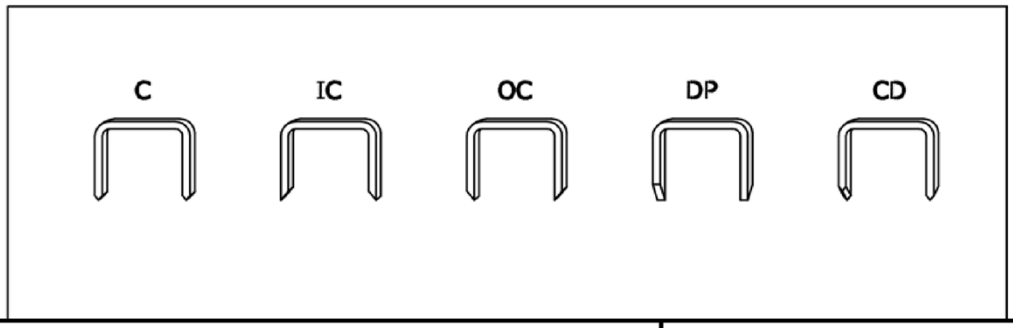

Material: Stainless steel wire WNr. 1.4301/AISI 304 according to EN 10088-1 OR Hot dip galvanised steel wire according to EN ISO 16120 with a layer of thickness of at least 12µ	**Wire dimension:** d = ϕ 1,53 ± 0,025 mm a = 1,34 ± 0,03 mm c = 1,60 ± 0,025 mm
Tensile strength: >900 N/mm^2	**Staple dimensions:** b = 10,4 - 26,6 mm L = 22 – 80 mm t_3 = min L/2
Coating: Resin coating of type 3 according to DIN EN 14592:2008+A1:2012	

OMER staples d=1,53 mm, d=1,80 mm, d=2,00 mm	Annex 1.1
Technical description of the product Staples M2, 700, S4, 1016, WP d=1,53mm, stainless steel or hot dip galvanised	

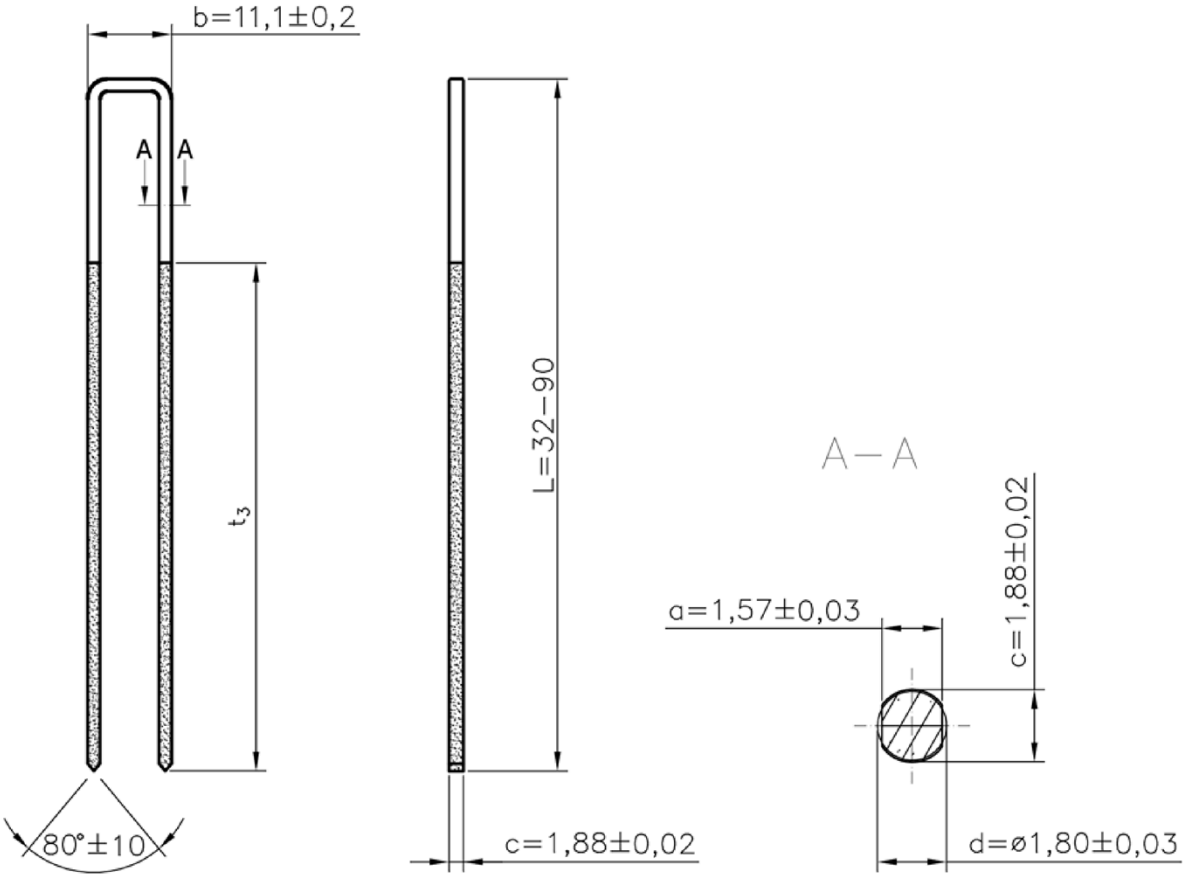

Material: Hot dip galvanised steel wire according to EN ISO 16120 with a layer of zinc, thickness of at least 12µ	**Wire dimension:** d = ϕ 1,80 ± 0,03 mm a = 1,57 ± 0,03 mm c = 1,88 ± 0,03 mm
Tensile strength: >900 N/mm^2	**Staple dimensions:** b = 11,1 ± 0,02 mm L = 32 – 90 mm t_3 = min L/2
Coating: Resin coating of type 3 according to DIN EN 14592:2008+A1:2012	

OMER staples d=1,53 mm, d=1,80 mm, d=2,00 mm	Annex 1.2
Technical description of the product Staples M3 d=1,80mm, hot dip galvanised	

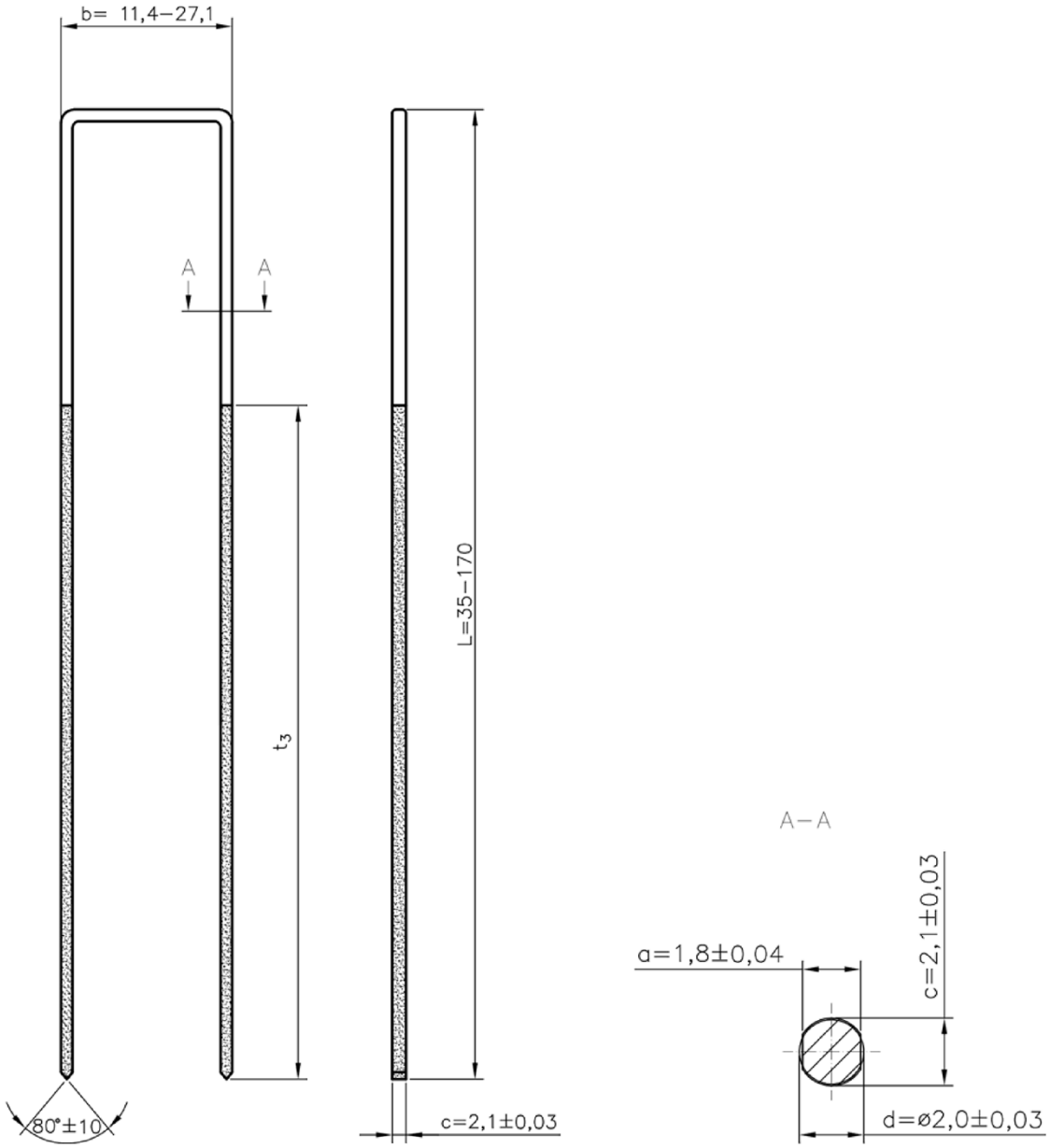

Material: Stainless steel wire WNr. 1.4301/AISI 304 according to EN 10088-1 OR Hot dip galvanised steel wire according to EN ISO 16120 with a layer of thickness of at least 12µ	**Wire dimension:** d = ϕ 2,00 ± 0,03 mm a = 1,8 ± 0,04 mm c = 2,1 ± 0,03 mm
Tensile strength: >900 N/mm^2	**Staple dimensions:** b = 11,4 - 27,1 mm L = 35 – 170 mm t_3 = min L/2
Coating: Resin coating of type 3 according to DIN EN 14592:2008+A1:2012	

OMER staples d=1,53 mm, d=1,80 mm, d=2,00 mm	Annex 1.3
Technical description of the product Staples S29, SD d=2,00mm, stainless steel or hot dip galvanised	

Annex 2 Specifications of intended use

A.2.1 Loading

- Static and quasi-static loads (not relevant to fatigue)
- Short-, medium-,long term and permanent load duration withdrawal as well as shear

A.2.2 Connection material

OMER staples d=1,53mm, d=1,80mm, d=2,00mm are used for load bearing connections of the following material.

Material for base building components

- Solid timber (softwood) according to EN 338[1]/ EN 14081-1[2],
- Glued laminated timber (softwood) according to EN 14080[3],
- Glued solid timber according to EN 14080,
- Laminated veneer lumber LVL according to EN 14374[4],
- Cross-laminated timber according to European technical Assessments.

Material for connected building components

- Oriented Strand Board (OSB) according to EN 300[5] and EN 13986[6],
- Plywood according to EN 636[7] and EN 13986,
- Cement-bonded particle boards according to EN 634-2[8] and EN 13986,
- Fibreboards according to EN 622-2[9], EN 622-3[10] and EN 13986,
- Laminated veneer lumber LVL according to EN 13986 in connection with EN 14279[11],
- Solid-wood panels according to EN 13353[12] and EN 13986,
- Gypsum boards according to EN 520[13], density $\rho \geq 680$ kg/m³ but without Type D,
  Gypsum boards Type D with a density of $\rho \geq 800$ kg/m³
- Gypsum boards with mat reinforcement according to EN 15283-1[14] and Gypsum fibre boards according to EN 15283-2[15]
- Fibre-cement flat sheets – Product specification and test methods according to EN 12467[16]
- Thermal insulation products for buildings – Factory made wood fibre (WF) products – Specification according to EN 13171[17]

1	EN 338:2016	Timber structures - Strength classes
2	EN 14081-1:2005+A1:2011	Timber structures – Strength graded structural timber with rectangular cross section – Part 1: General requirements
3	EN 14080:2013	Timber structures - Glued laminated timber and glued solid timber - Requirements
4	EN 14374:2004	Timber structures - Structural laminated veneer lumber - Requirements
5	EN 300:2006	Oriented strand boards (OSB) – Definition, classification and specifications
6	EN 13986:2004+A1:2015	Wood-based panels for use in construction - Characteristics, evaluation of conformity and marking
7	EN 636:2012+A1:2015	Plywood - Specifications
8	EN 634-2:2007	Cement-bonded particleboards – Specifications – Part 2: Requirements for OPC bonded particleboards for use in dry, humid and external conditions
9	EN 622-2:2004	Fibreboards - Specifications - Part 2: Requirements for hardboards
10	EN 622-3:2004	Fibreboards - Specifications - Part 3: Requirements for medium boards
11	EN 14279:2009	Laminated Veneer Lumber (LVL) – Definitions, classification and specifications
12	EN 13353:2008+A1:2011	Solid wood panels (SWP) – Requirements
13	EN 520:2004+A1:2009	Gypsum plasterboards – Definitions, requirements and test methods
14	EN 15283-1:2008+A1:2009	Gypsum boards with fibrous reinforcement – Definitions, requirements and test methods – Part 1:Gypsum boards with mat reinforcement
15	EN 15283-2:2008+A1:2009	Gypsum boards with fibrous reinforcement – Definitions, requirements and test methods – Part 2: Gypsum fibre boards
16	EN 12467:2012+A1:2016	Fibre-cement flat sheets – Product specification and test methods
17	EN 13171:2012	Thermal insulation products for buildings – Factory made wood fibre (WF) products – Specification

A.2.3 Use conditions (environmental conditions)

A.2.3.1 Durability against corrosion

OMER staples d=1,53mm, d=1,80mm, d=2,00mm made of non-alloy steel rods are hot dip galvanized. The mean thickness of the zinc coating is minimum 12 µ. Steel no. 1.4301/AISI 304 is used for OMER staples d=1,53mm, d=1,80mm, d=2,00mm made of stainless steel.

A.2.3.2 Durability of the resin coating

The resin coating t_3 of OMER staples d=1,53mm, d=1,80mm, d=2,00mm has a minimum length of 50 % of the legs according to Annex 1. The following kind of resin is used:

Basecoat no. 931432.0.579
Topcoat no. 931432.0.582

Data sheets of chemical compositions (as well as the process of application and drying for resin coatings) are deposited at Deutsches Institut für Bautechnik.

The resin coating fulfills the requirements of the EAD 130019-00-0603, clause 2.2.9 "durability of the resin coating".

A.2.3.3 Installation

EN 1995-1-1[18] applies for the installation of constructions with OMER staples d=1,53mm, d=1,80mm, d=2,00mm.

The point side penetration length t_2 of the staples has to be at least 14·d.

For connections of wood fibre insulation material the maximum length of the leg is L = 85·d, the minimum width is b = 20 mm and the maximum thickness of the insulation is 70·d.

[18] EN 1995-1-1:2004+A1:2008+A2:2014 Eurocode 5: Design of timber structures – Part 1-1: General - Common rules and rules for buildings

Annex 3 Specifications of essential characteristics

A.3.1 Characteristic yield moment according to EN 14592

Table A.3.1 Characteristic yield moment $M_{y,k}$ [Nm] of one leg of OMER staples d=1,53mm, d=1,80mm, d=2,00mm

Type	**Nominal diameter** d [mm]	**Characteristic yield moment** $M_{y,k}$ [Nm]	
		galvanised	**stainless steel**
Staples M2, 700, S4, 1016, WP	1,53	0,59	-
		-	0,63
Staples M3	1,80	0,81	-
Staples S29, SD	2,00	1,08	-
		-	1,26

A.3.2 Withdrawal capacity for short-term and medium-term loads

The characteristic withdrawal parameter $f_{ax,k}$ of one leg (at an angle of at least 30° between the width of staple crown and the direction of the grain) for material with a characteristic density $\rho_k \geq 350$ kg/m³ as well as for short-term and medium-term withdrawal loads can be taken from Table A.3.2.

Table A.3.2 Characteristic withdrawal parameter $f_{ax,k}$ of one leg OMER staples d=1,53mm, d=1,80mm, d=2,00mm

Type	**Nominal diameter** d in mm	**Withdrawal parameter short- and medium-term load** $f_{ax,k}$ in N/mm²	
		galvanised	**stainless steel**
Staples M2, 700, S4, 1016, WP	1,53	6,4	-
		-	5,1
Staples M3	1,80	5,9	-
Staples S29, SD	2,00	5,3	-
		-	5,8

The withdrawal parameter according to Table A.3.2 have been determined for a maximum length of staples in the base building components of $t_2 \leq 20 \cdot d$.

A.3.3 Design value of withdrawal capacity for long-term and permanent loads

The design value of withdrawal capacity for long-term and permanent loads for service class 1 and 2 for one staple may be taken to:

$$R_{ax,d} = 70 \text{ N, with } \gamma_M = 1{,}3.$$

The design value of withdrawal capacity applies for a characteristic density of $\rho_k \geq 350$ kg/m³.

A.3.4 Maximum thickness of base building components

The maximum thickness t_1 according to Table A.3.3 applies for base building components (made of material according to chapter A.2.2) depending on the density of base building components.

Table A.3.3 Maximum thickness of connected material

Maximum thickness t_1 in mm	**Range of density** ρ_k in kg/m³	**Material of connected components Examples**
80	$\rho_k \leq 400$	Solid timber of softwood
60	$400 < \rho_k \leq 650$	Wood-based panels and solid timber of hard- and softwood
40	$650 < \rho_k \leq 900$	Wood-based panels and gypsum boards
25	$900 < \rho_k \leq 1200$	Hardboards, gypsum fibreboards, cement-bonded particleboards
20	$1200 < \rho_k \leq 1600$	Highly compressed gypsum fibreboards

The maximum thickness of wood fibre insulation material is $t_1 \leq 70 \cdot d$.

A.3.5 Head pull-through capacity of wood and wood-based panels

The characteristic head pull-through parameters $f_{head,k}$ for one staple of OMER staples d=1,53mm, d=1,80mm, d=2,00mm for a minimum thickness of material according to Table A.3.4 (for material with a characteristic density of $\rho_k \geq 350$ kg/m³) shall be taken from Table A.3.5:

Table A.3.4 Minimum thickness of wood and wood-based panels

Wood or wood-based panels	**Minimum thickness** t_1 in mm
Solid timber (softwood)	24
Solid wood panels	7d*
Plywood	6*
Oriented Strand Boards OSB	8*
Resin-bonded particleboards	8*
Cement-bonded particleboards	8*

* If staple crown is countersunk it has to be increased by 2 mm.

The characteristic head pull-through capacity may be calculated according to equation (1)

$$R_{ax,2,k} = f_{head,k} \cdot b \cdot d \quad [N] \qquad (1)$$

with:

$f_{head,k}$ characteristic head pull-through parameter in N/mm²

b width of staple crown [mm], b ≤ 27 mm

d nominal diameter of raw staple wire in mm

Table A.3.5 Characteristic head pull-through parameter $f_{head,k}$ for material $\rho_k \geq 350$ kg/m³, b ≤ 27 mm

Type	**Nominal diameter** d in mm	**Width of staple crown** b in mm	**Head pull-through parameter** $f_{head,k}$ in N/mm²
Staples M2, 700, S4, 1016, WP	1,53	10,5	33
		26,1	33
Staples M3	1,80	11,1	28
Staples S29, SD	2,00	11,6	27
		26,5	27

A.3.6 Head pull-through capacity of wood fibre insulation material

The characteristic head pull-through parameter $f_{head,k}$ of OMER staples with d=2,00mm for wood fibre insulation material with a mean density of at least 200 kg/m³ and a minimum thickness of the material of 60 mm is $f_{head,k}$ = 8,85 N/mm² for one staple. The width of the staple crown has to be at least 20 mm.

A.3.7 Minimum tensile strength of the wire

Table A.3.7 Minimum tensile strength f_u [N/mm²] of the raw wire OMER staples d=1,53mm, d=1,80mm, d=2,00mm

Nominal diameter d in mm	**1,53**	**1,80**	**2,00**
Galvanised	900		
Stainless steel	900		