Deutsches Institut für Bautechnik

DIBt

Member of EOTA

www.eota.eu

Public-law institution jointly founded by the federal states and the Federation

**European Technical Assessment Body for construction products**

Designated in accordance with Article 39 of Regulation (EU) No 2024/3110 and member of EOTA (European Organisation for Technical Assessment)

# European Technical Assessment ETA-06/0179 of 21 August 2026

English translation prepared by DIBt - Original version in German language

**General Part**

| | |
|---|---|
| Technical Assessment Body issuing the European Technical Assessment: | Deutsches Institut für Bautechnik |
| Trade name of the construction product | Hilti wedge anchor DBZ |
| Product family to which the construction product belongs | Fasteners for use in concrete for redundant non-structural systems |
| Manufacturer | Hilti Aktiengesellschaft<br>Feldkircherstrasse 100<br>9494 SCHAAN<br>FÜRSTENTUM LIECHTENSTEIN |
| Manufacturing plant | Hilti Plants |
| This European Technical Assessment contains | 8 pages including 3 annexes which form an integral part of this assessment |
| This European Technical Assessment is issued in accordance with Article 95(4) of Regulation (EU) 2024/3110, on the basis of | EAD 330747-00-0601 |
| This version replaces | ETA-06/0179 issued on 12 December 2022 |

The European Technical Assessment is issued by the Technical Assessment Body in its official language. Translations of this European Technical Assessment in other languages shall fully correspond to the original issued document and shall be identified as such.

Communication of this European Technical Assessment, including transmission by electronic means, shall be in full. However, partial reproduction may only be made with the written consent of the issuing Technical Assessment Body. Any partial reproduction shall be identified as such.

This European Technical Assessment may be withdrawn by the issuing Technical Assessment Body, in particular pursuant to information by the Commission in accordance with Article 36(3) of Regulation (EU) No 2024/3110.

## Specific Part

### 1 Technical description of the product

The Hilti wedge anchor DBZ of size 6/4,5 and 6/35 is an anchor made of galvanized steel which is placed into a drilled hole and anchored by deformation-controlled expansion.

Product and product description is given in Annex A.

### 2 Specification of the intended use in accordance with the applicable European Assessment Document

The performances given in Section 3 are only valid if the anchor is used in compliance with the specifications and conditions given in Annex B.

The verifications and assessment methods on which this European Technical Assessment is based lead to the assumption of a working life of the anchor of at least 50 years. The indications given on the working life cannot be interpreted as a guarantee given by the producer, but are to be regarded only as a means for choosing the right products in relation to the expected economically reasonable working life of the works.

### 3 Performance of the product and references to the methods used for its assessment

#### 3.1 Safety in case of fire (BWR 2)

| Essential characteristic | Performance |
|---|---|
| Reaction to fire | Class A1 |
| Resistance to fire | See Annex C1 |

#### 3.2 Safety in use (BWR 4)

| Essential characteristic | Performance |
|---|---|
| Characteristic resistance for all load directions and modes of failure for simplified design | See Annex C1 |
| Durability | See Annex B1 |

### 4 Assessment and verification of constancy of performance (AVCP) system applied, with reference to its legal base

In accordance with European Assessment Document EAD No. 330747-00-0601, the applicable European legal act is: [97/161/EC].

The system to be applied is: 2+

### 5 Technical details necessary for the implementation of the AVCP system, as provided for in the applicable EAD

Technical details necessary for the implementation of the AVCP system are laid down in the control plan deposited with Deutsches Institut für Bautechnik.

Issued in Berlin on 21 August 2026 by Deutsches Institut für Bautechnik

Dipl.-Ing. Beatrix Wittstock
Head of Section

*beglaubigt:*
Tempel

## Product and installed condition

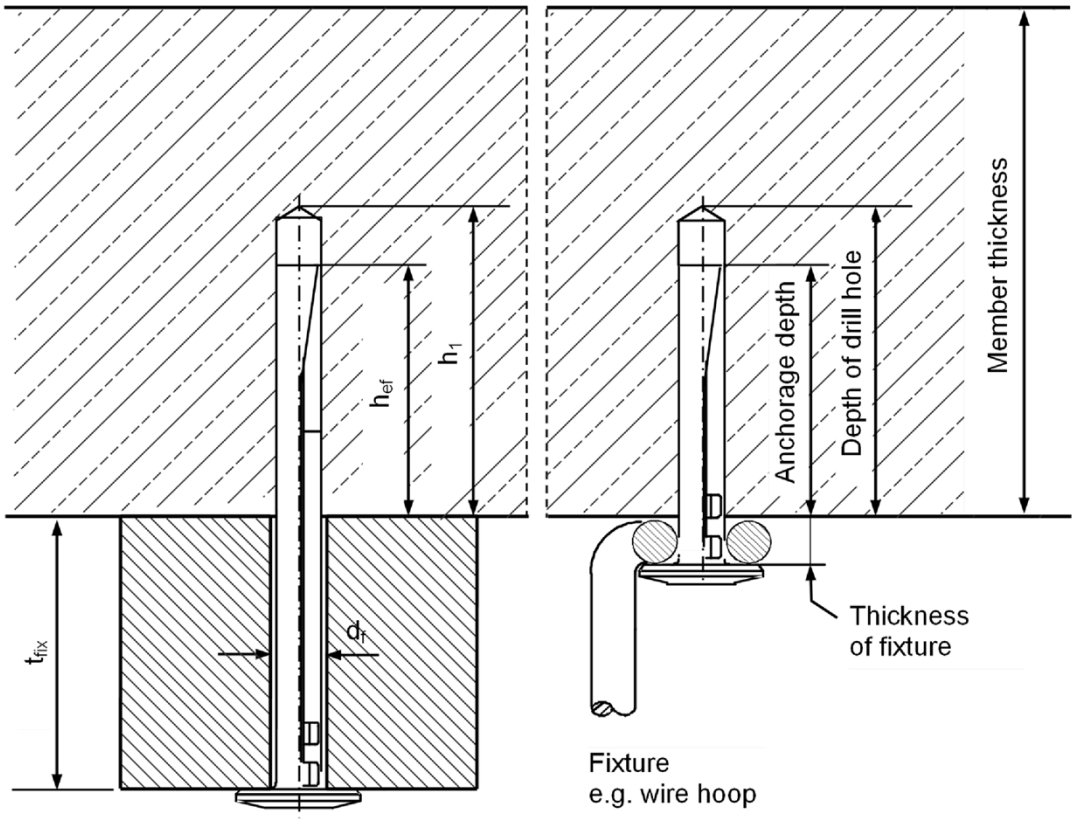


## Product description: Hilti wedge anchor DBZ 6/4,5 and DBZ 6/35

**DBZ 6/4,5**

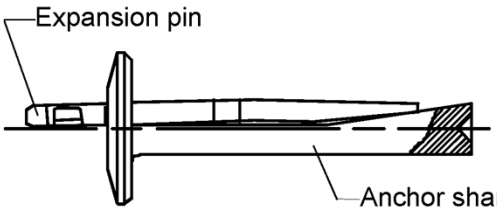


**DBZ 6/35**

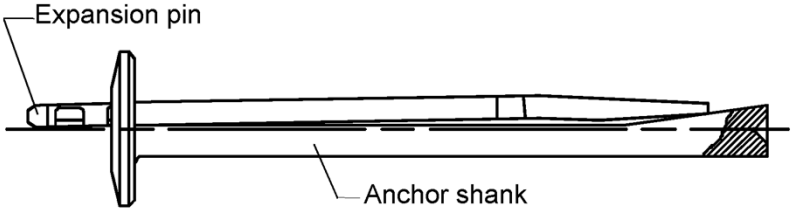


| Hilti wedge anchor DBZ | Annex A1 |
|---|---|
| **Product description**<br>Installed condition | |

## Product dimensions

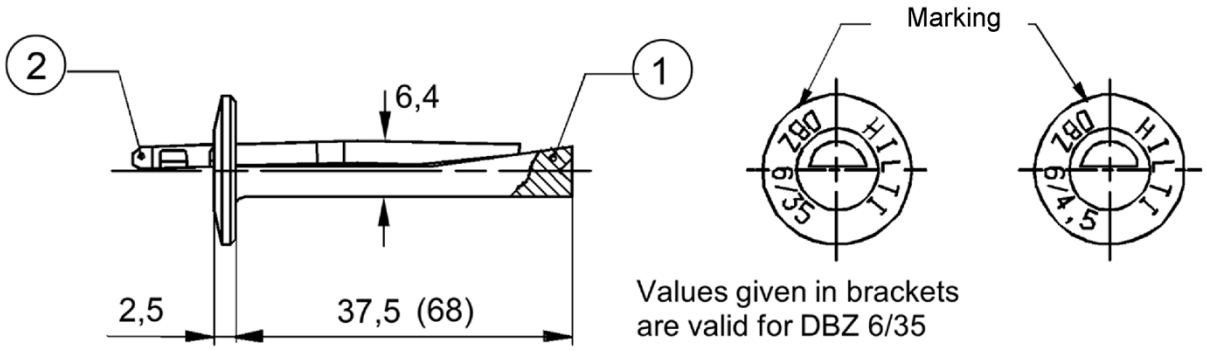


Values given in brackets are valid for DBZ 6/35

## Table A1: Materials

| Part | Designation | Material |
|---|---|---|
| 1 | Anchor shank | Cold formed steel; galvanized ≥ 5µm |
| 2 | Expansion pin | Cold formed steel; galvanized ≥ 5µm |

| | |
|---|---|
| **Hilti wedge anchor DBZ** | **Annex A2** |
| **Product description**<br>Product dimensions and materials | |

Deutsches Institut für Bautechnik DIBt

## Specifications of intended use

**Anchorages subject to:**
- Static and quasi-static loading.
- Only for redundant non-structural systems according to EN 1992-4:2018.
- Fire exposure.

**Base materials:**
- Compacted, reinforced or unreinforced normal weight concrete without fibres in accordance with EN 206:2013+A1:2016.
- Strength classes C20/25 to C50/60 according to EN 206:2013+A1:2016.
- Cracked and uncracked concrete.

**Use conditions (environmental conditions):**
- In structures subject to dry, internal conditions.

**Design:**
- Anchorages are designed under the responsibility of an engineer experienced in anchorages and concrete work.
- Verifiable calculation notes and drawings are prepared taking account of the loads to be anchored. The position of the anchor is indicated on the design drawings (e.g. position of the anchor relative to reinforcement or to supports).
- Anchorages under static or quasi-static loading are designed in accordance with: EN 1992-4: 2018.
- In case of requirements to resistance to fire local spalling of the concrete cover must be avoided.

**Installation:**
- Anchor installation carried out by appropriately qualified personnel and under the supervision of the person responsible for technical matters of the site.
- Anchor installation in accordance with the manufacturer's specifications and drawings and using the appropriate tools.
- Check of concrete being well compacted, e.g. without significant voids.
- Positioning of the drill holes without damaging the reinforcement.
- In case of aborted hole: new drilling at a minimum distance away of twice the depth of the aborted hole or smaller distance if the aborted drill hole is filled with high strength mortar and if under shear or oblique tension load it is not in the direction of load application.
- The anchor may only be set once.
- Overhead installations are permitted.

| | |
|---|---|
| **Hilti wedge anchor DBZ** | **Annex B1** |
| **Intended use**<br>Specifications | |

Deutsches Institut für Bautechnik DIBt

## Table B1: Installation data

| **Hilti wedge anchor** | | | **DBZ 6/4,5** | **DBZ 6/35** | |
|---|---|---|---|---|---|
| Nominal diameter of drill bit | $d_0$ | [mm] | 6 | | |
| Cutting diameter of drill bit | $d_{cut} \leq$ | [mm] | 6,4 | | |
| Depth of drill hole | $h_1 \geq$ | [mm] | 40 | 55 | 70 |
| Thickness of fixture | $t_{fix}$ | [mm] | $\leq 4,5$ | $20 \leq t_{fix} \leq 35$ | $5 \leq t_{fix} < 20$ |
| Minimum member thickness | $h_{min} \geq$ | [mm] | 80 | | 100 |
| Effective anchorage depth | $h_{ef} \geq$ | [mm] | 32 | | |
| Clearance hole diameter | $d_f \leq$ | [mm] | 7 | | |

## Installation instructions

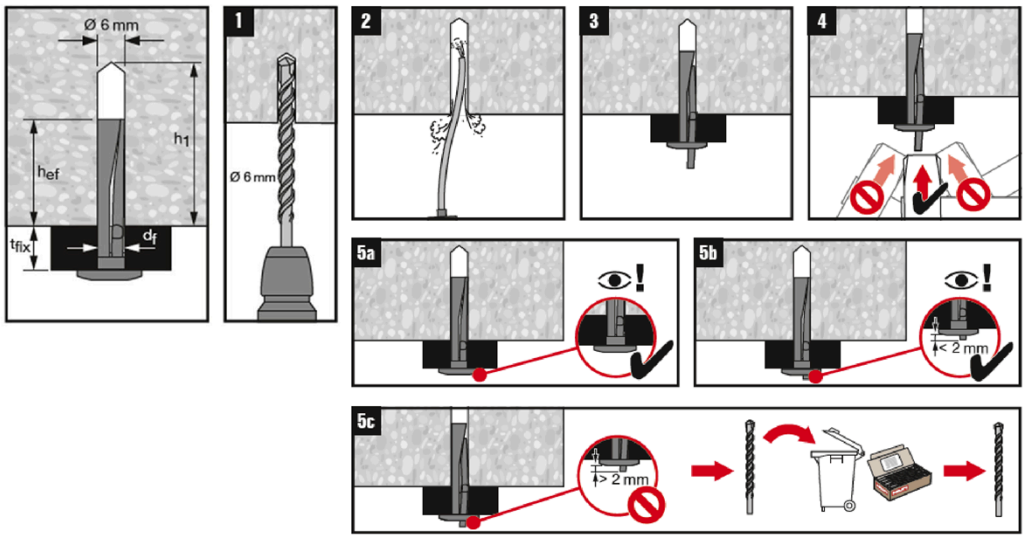


1 Drill hole with drill bit
2 Blow out dust completely
3 Insert anchor with fixture
4 Hammer down the expansion pin
5 a) Proper setting is ensured if the pin is completely flattened
b) A maximum exceedance of 2 mm can be accepted
c) In case the pin exceedance is larger than 2mm replace the used drill bit with a new drill bit

| **Hilti wedge anchor DBZ** | **Annex B2** |
|---|---|
| **Intended use**<br>Installation data and instructions | |

Deutsches Institut für Bautechnik DIBt

## Table C1: Characteristic values for static and quasi-static loads

| **Hilti wedge anchor** | | | **DBZ 6/4,5 and DBZ 6/35** |
|---|---|---|---|
| **All load directions** | | | |
| Characteristic resistance in C20/25 to C50/60 | $F^0_{Rk}$ | [kN] | 5,0 |
| Edge distance | $c_{cr} = c_{min}$ | [mm] | 150 |
| Spacing | $s_{cr} = s_{min}$ | [mm | 200 |
| Partial safety factor | $\gamma_M$ | [-] | 1,5 [1)] |
| **Shear load with lever arm** | | | |
| Characteristic bending resistance | $M^0_{Rk,s}$ | [Nm] | 5,0 |
| Partial safety factor | $\gamma_{Ms}$ | [-] | 1,25 |

[1)] The installation factor $\gamma_{inst}$ = 1,0 is included.

## Table C2: Characteristic values under fire exposure in concrete C20/25 to C50/60 in any load direction without lever arm

| **Fire resistance class** | **Hilti wedge anchor** | | | **DBZ 6/4,5 and DBZ 6/35** |
|---|---|---|---|---|
| R 30 | Characteristic resistance | $F_{Rk,fi}$ | [kN] | 0,6 |
| R 60 | Characteristic resistance | $F_{Rk,fi}$ | [kN] | 0,5 |
| R 90 | Characteristic resistance | $F_{Rk,fi}$ | [kN] | 0,3 |
| R 120 | Characteristic resistance | $F_{Rk,fi}$ | [kN] | 0,2 |
| R 30 to R 120 | Spacing | $s_{cr,fi}$ | [mm] | 200 |
| | Edge distance | $c_{cr,fi}$ | [mm] | 150 |
| In case of fire attack from more than one side, the edge distance shall be ≥ 300 mm. | | | | |

| **Hilti wedge anchor DBZ** | **Annex C1** |
|---|---|
| **Performance**<br>Characteristic resistance to static and quasi-static loads and under fire exposure | |