Deutsches Institut für Bautechnik DIBt

Member of EOTA
www.eota.eu

Public-law institution jointly founded by the federal states and the Federation

**European Technical Assessment Body for construction products**

Designated in accordance with Article 39 of Regulation (EU) No 2024/3110 and member of EOTA (European Organisation for Technical Assessment)

# European Technical Assessment

# ETA-07/0336 of 23 July 2026

English translation prepared by DIBt - Original version in German language

**General Part**

| | |
|---|---|
| Technical Assessment Body issuing the European Technical Assessment: | Deutsches Institut für Bautechnik |
| Trade name of the construction product | Insulation support TFIX-8M |
| Product family to which the construction product belongs | Plastic anchor for fixing of external thermal insulation composite systems with rendering |
| Manufacturer | RAWLPLUG S.A.<br>Kwidzynska 6<br>51-416 WROCLAW<br>POLEN |
| Manufacturing plant | RAWLPLUG S.A.<br>Kwidzynska 6<br>51-416 Wroclaw<br>POLAND |
| This European Technical Assessment contains | 14 pages including 3 annexes which form an integral part of this assessment |
| This European Technical Assessment is issued in accordance with Article 95(4) of Regulation (EU) 2024/3110, on the basis of | EAD 330196-01-0604 |
| This version replaces | ETA-07/0336 issued on 14 August 2025 |

The European Technical Assessment is issued by the Technical Assessment Body in its official language. Translations of this European Technical Assessment in other languages shall fully correspond to the original issued document and shall be identified as such.

Communication of this European Technical Assessment, including transmission by electronic means, shall be in full. However, partial reproduction may only be made with the written consent of the issuing Technical Assessment Body. Any partial reproduction shall be identified as such.

This European Technical Assessment may be withdrawn by the issuing Technical Assessment Body, in particular pursuant to information by the Commission in accordance with Article 36(3) of Regulation (EU) No 2024/3110.

## Specific Part

### 1 Technical description of the product

The insulation support TFIX-8M is a nailed-in anchor which consists of a plastic part made of polypropylene (virgin material) and an accompanying specific nail of galvanised steel. The head of the nail has an additional plastic coating.

The anchor may in addition be combined with the anchor plates KWL 90, KWL 110 and KWL 140.

The product description is given in Annex A.

### 2 Specification of the intended use in accordance with the applicable European Assessment Document

The performances given in Section 3 are only valid if the anchor is used in compliance with the specifications and conditions given in Annex B.

The verifications and assessment methods on which this European Technical Assessment is based lead to the assumption of a working life of the anchor of at least 25 years. The indications given on the working life cannot be interpreted as a guarantee given by the producer, but are to be regarded only as a means for choosing the right products in relation to the expected economically reasonable working life of the works.

### 3 Performance of the product and references to the methods used for its assessment

#### 3.1 Safety and accessibility in use (BWR 4)

| Essential characteristic | Performance |
|---|---|
| Characteristic load bearing capacity<br>- Characteristic resistance under tension load<br>- Minimum edge distance and spacing | <br>See Annex C 1<br>See Annex B 2 |
| Displacements | See Annex C 2 |
| Plate stiffness | See Annex C 2 |

#### 3.2 Energy economy and heat retention (BWR 6)

| Essential characteristic | Performance |
|---|---|
| Point thermal transmittance | See Annex C 2 |

### 4 Assessment and verification of constancy of performance (AVCP) system applied, with reference to its legal base

In accordance with EAD No. 330196-01-0604, the applicable European legal act is: [97/463/EC].

The system to be applied is: 2+

## 5 Technical details necessary for the implementation of the AVCP system, as provided for in the applicable European Assessment Document

Technical details necessary for the implementation of the AVCP system are laid down in the control plan deposited with Deutsches Institut für Bautechnik.

Issued in Berlin on 23 July 2026 by Deutsches Institut für Bautechnik

Dipl.-Ing. Beatrix Wittstock
Head of Section

*beglaubigt:*
Ziegler

## TFIX-8M

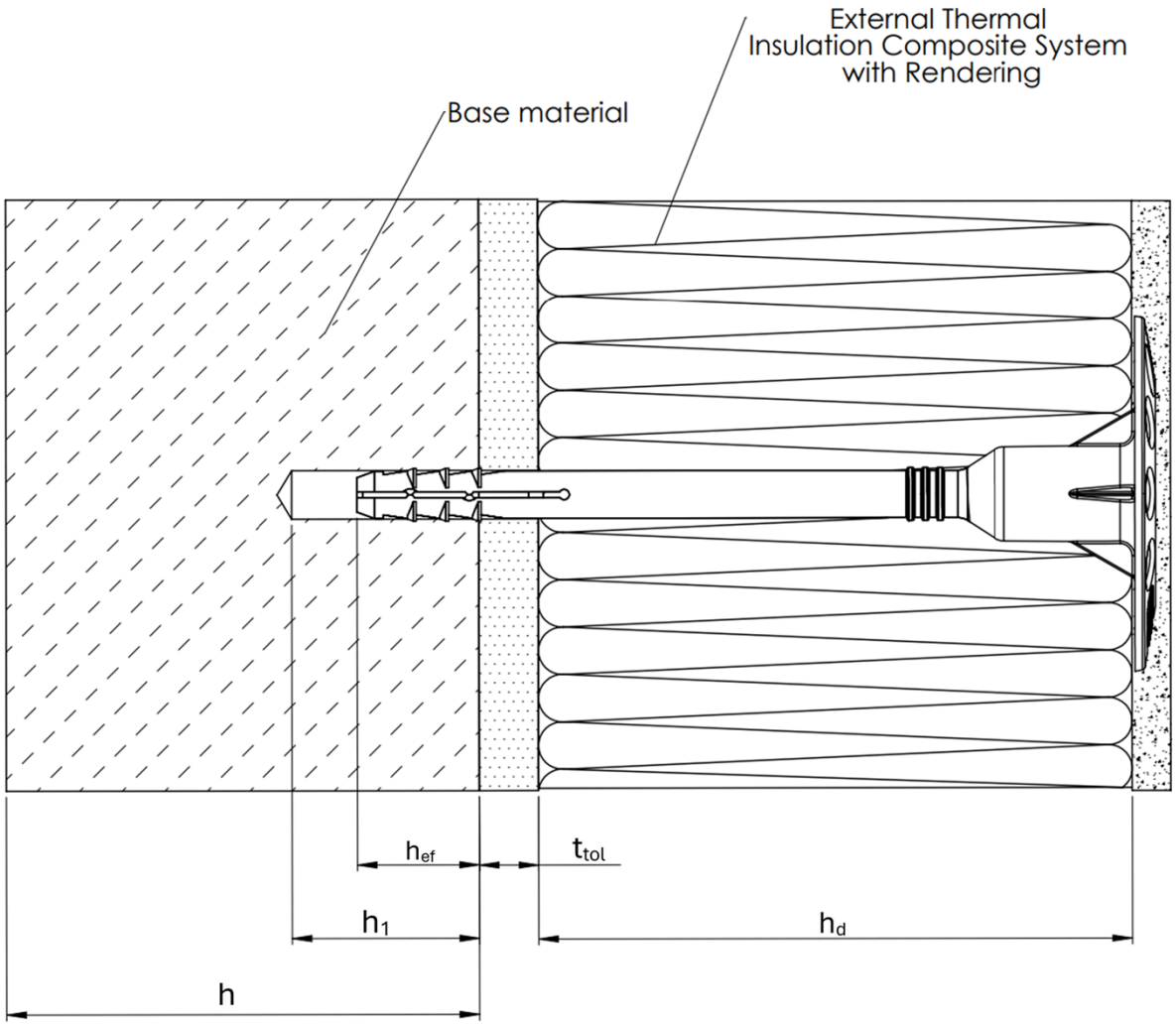


## Legend

$h_{ef}$ = effective anchorage depth
h = thickness of member (wall)
$h_1$ = depth of drilled hole to deepest point
$h_d$ = thickness of insulation material
$t_{tol}$ = thickness of equalizing layer or non-load-bearing coating

| | |
|---|---|
| **Insulation support TFIX-8M** | **Annex A 1** |
| **Product description**<br>Installed condition | |

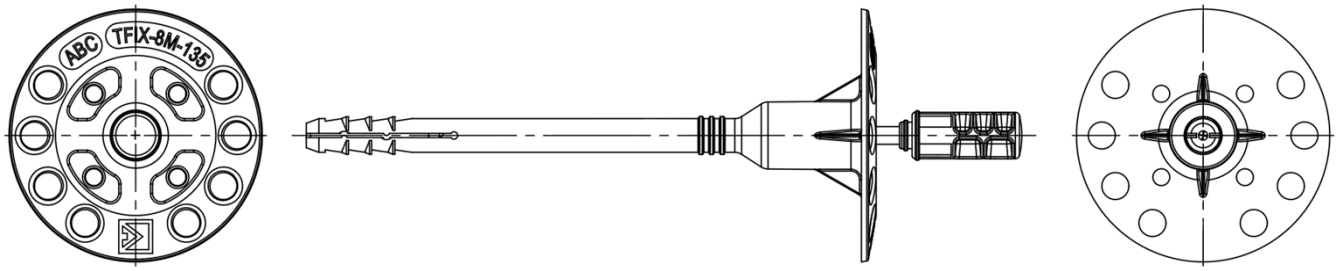


Marking of the anchor plate:
mark of plant
Anchor type (TFIX-8M)
Length of anchor (e.g. 135)

## Anchor sleeve

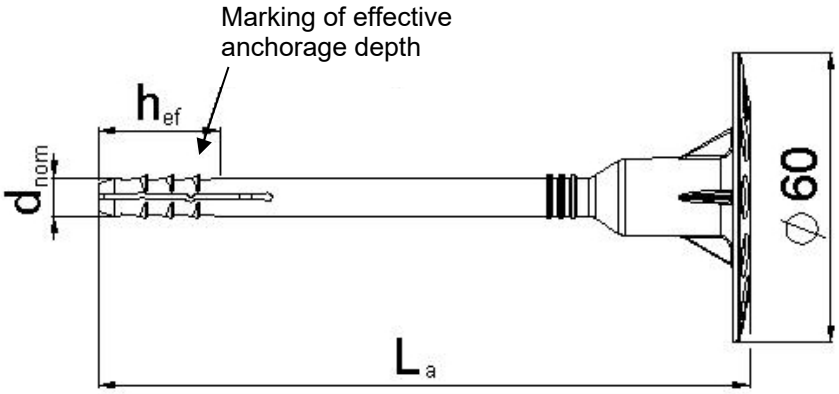


## Accompanying expansion nail

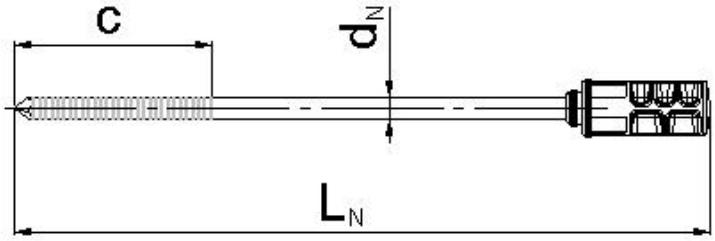


| | |
|---|---|
| **Insulation support TFIX-8M** | **Annex A 2** |
| **Product description**<br>Anchor sleeve and expansion element | |

**Table A1: Dimensions [mm]**

| Anchor type | Anchor sleeve | | Accompanying expansion nail | |
|---|---|---|---|---|
| | $d_{nom}$ | $h_{ef}$ | $d_N$ | c |
| TFIX-8M | 8 | 25 | 4,2 | 45 |

Various lengths of the anchor are permissible: $L_{a\,min}$ = 75mm; $L_{a\,max}$ = 295mm

Determination of maximum thickness of insulation: $h_d = L_a - t_{tol} - h_{ef}$

e.g. $L_a$ = 135mm
$t_{tol}$ = 10mm

$h_d$ = 135mm - 10mm – 25mm
$h_d$ = 100mm

**Table A2: Materials**

| Name | Materials |
|---|---|
| Anchor sleeve | Virgin polypropylene<br>Colour: natural |
| Expansion nail | Galvanized steel ≥ 5 µm according to EN ISO 4042:2022<br><br>Head of nail: Coating of polyamide with glass fiber reinforced, colour: natural |

**Insulation support TFIX-8M**

**Product description**
Dimension, materials

**Annex A 3**

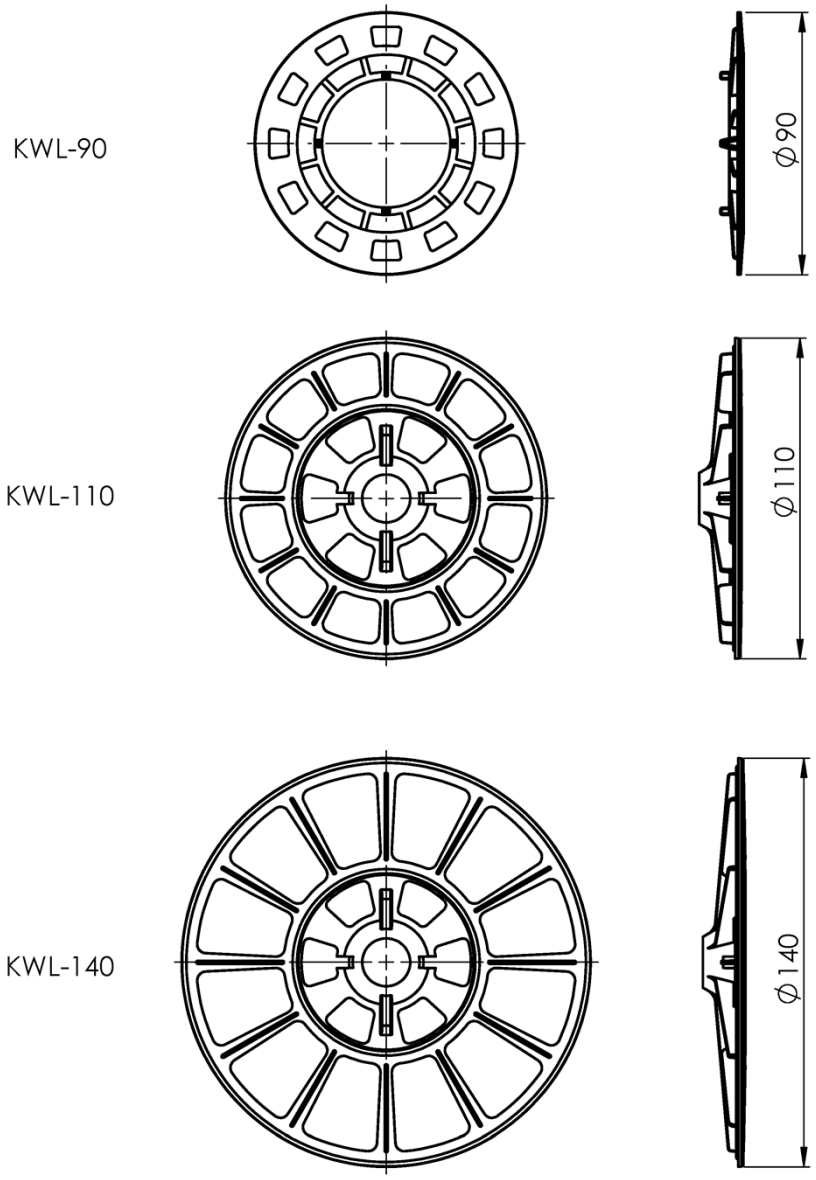


**Table A3: Additional plates, diameter and materials**

| Plate | Diameter | Colour | Materials |
|---|---|---|---|
| KWL-90 | 90 | nature | Virgin polyamide PA 6 + GF, virgin polypropylene PP |
| KWL-110 | 110 | nature | |
| KWL-140 | 140 | nature | |

**Insulation support TFIX-8M**

**Product description**
Slip on plates combined with TFIX-8M

**Annex A 4**

## Specifications of intended use

**Anchorages subject to:**

- The anchor may only be used for transmission of wind suction loads and shall not be used for the transmission of dead loads of the thermal insulation composite system.

**Base materials:**

- Compacted normal weight concrete without fibres (base material group A) according to Annex C 1.
- Solid masonry (base material group B), according to Annex C 1.
- Hollow or perforated masonry (base material group C), according to Annex C 1.
- For other base materials of the base material groups A, B or C the characteristic resistance of the anchor may be determined by job site tests according to EOTA Technical Report TR 051 edition April 2018.

**Temperature Range:**

- 0°C to +40°C (max. short term temperature +40°C and max. long term temperature +24°C)

**Design:**

- The anchorages are designed under the responsibility of an engineer experienced in anchorages and masonry work with the partial safety factors $\gamma_M$ = 2,0 and $\gamma_F$ = 1,5, if there are no other national regulations.
- Verifiable calculation notes and drawings are prepared taking account of the loads to be anchored. The position of the anchor is indicated on the design drawings.
- Fasteners are only to be used for multiple fixings of thermal insulation composite systems.

**Installation:**

- Hole drilling by the drill modes according to Annex B 3
- Anchor installation carried out by appropriately qualified personnel and under the supervision of the person responsible for technical matters of the site.
- Installation temperature from 0°C to +40°C
- Exposure to UV due to solar radiation of the anchor not protected by rendering ≤ 6 weeks

| | |
|---|---|
| **Insulation support TFIX-8M** | **Annex B 1** |
| **Intended use**<br>Specifications | |

**Table B1: Installation parameters**

| | | |
|---|---|---|
| Anchore type | | TFIX-8M |
| Drill hole diameter | $d_o$ = [mm] | 8 |
| Cutting diameter of drill but | $d_{cut}$ < [mm] | 8,45 |
| Depth of drilled hole to deepest point | $h_1$> [mm] | 35 |
| Effective anchorage depth | $h_{ef}$ ≥ [mm] | 25 |

**Table B2: Anchor distances and dimensions of members**

| | | |
|---|---|---|
| Anchore type | | TFIX-8M |
| Minimum spacing | $s_{min}$ = [mm] | 100 |
| Minimum edge distance | $c_{min}$ = [mm] | 100 |
| Minimum thickness of member | h = [mm] | 100 |

**Scheme of distances and spacing**

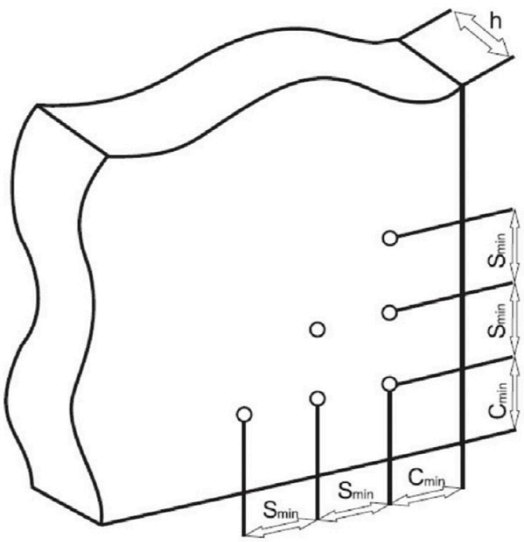


| | |
|---|---|
| **Insulation support TFIX-8M** | **Annex B 2** |
| **Intended use**<br>Installation parameters, edge distances and spacing | |

## Installation instructions

1)

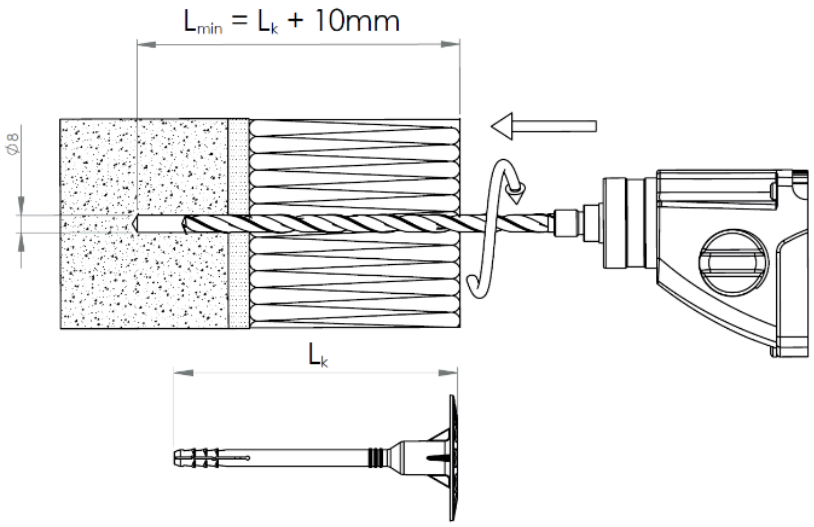


2)

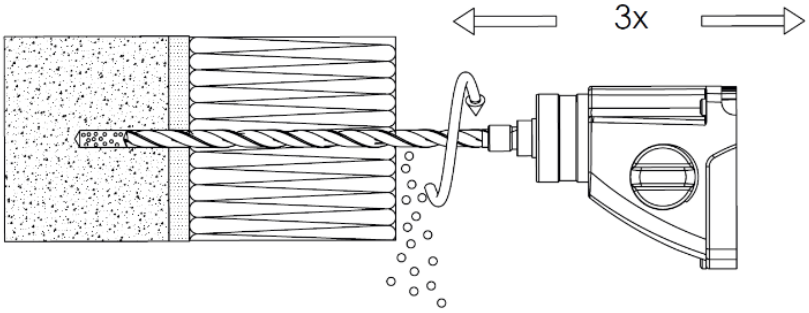


3)

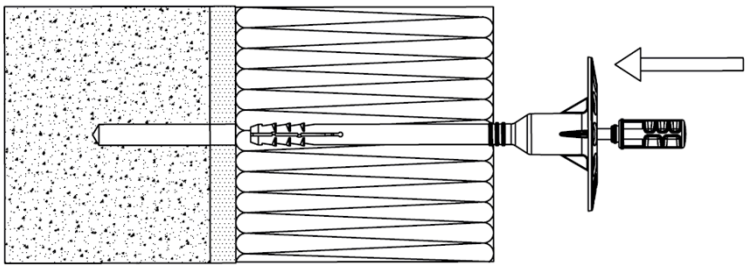

| | |
|---|---|
| **Insulation support TFIX-8M** | **Annex B 3** |
| **Intended use**<br>Installation instructions | |

**4)**

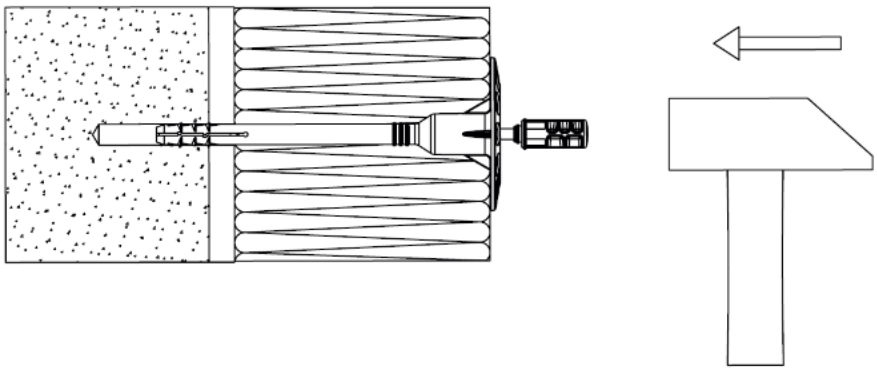

**5)**

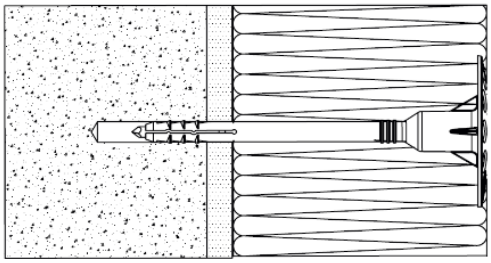

1) Drill hole perpendicular to the substrate surface
2) Clean the drill hole 3x
3) Put TFIX-8M into hole
4) Drive in the anchor with the hammer, the bottom side of the plate must be flush with the ETICS
5) Installed condition of the TFIX-8M

| | |
|---|---|
| **Insulation support TFIX-8M** | **Annex B 4** |
| **Intended use**<br>Installation instructions | |

**Table C1: Characteristic resistance to tension loads $N_{Rk}$ [kN] in concrete and masonry for single anchor**

| Anchor type | | | | | TFIX-8M |
|---|---|---|---|---|---|
| Base material | Bulk density ρ [kg/dm³] | Minimum compressive strength $f_b$ [N/mm²] | General remarks | Drilling method [1] | $N_{Rk}$ [kN] |
| Concrete C12/15 – C50/60 as per EN 206:2013+A1:2016 | | - | Compacted normal weight concrete without fibres | H | 1,2 |
| Clay brick, Mz as per EN 771-1:2011+A1:2015 | ≥ 2,0 | 12 | Vertically perforation [2] up to 15% | H | 1,2 |
| Sand-lime solid bricks (calcium silikate), KS as per EN 771-2:2011+A1:2015 | ≥ 1,8 | 12 | Vertically perforation [2] up to 15% | H | 1,2 |
| Sand-lime solid bricks (calcium silikate), KSL as per EN 771-2:2011+A1:2015 | ≥ 1,6 | 12 | Vertically perforation [2] > 15% and ≤ 50% outer web thickness ≥ 20 mm [3] | H | 0,9 |
| Perforated clay bricks, HLz as per EN 771-1:2011+A1:2015 | ≥ 1,0 | 12 | Vertically perforation [2] > 15% and ≤ 50% outer web thickness ≥ 14 mm [3] | D | 0,6 |
| Lightweight concrete solid block, Vbl as per EN 771-3:2011+A1:2015 | ≥ 0,7 | 4 | Proportion of handle hole to resting area up to 10%, maximum size of handle hole: length = 110 mm width = 45 mm | D | 0,3 |
| Lightweight concrete hollow block, Hbl, as per EN 771-3:2011+A1:2015 | ≥ 0,9 | 2 | outer web thickness ≥ 35 mm [3] | D | 0,5 |
| Lightweight concrete solid brick, V as per EN 771-3:2011+A1:2015 | ≥ 1,2 | 6 | Proportion of handle hole to resting area up to 10%, maximum size of handle hole: length = 110 mm width = 45 mm | H | 0,5 |

[1] H = hammer drill, D = rotary drill

[2] Cross section reduced by perforation vertically to the resting area

[3] The value for $N_{Rk}$ applies only for the given minimum outer web thickness; otherwise the characteristic resistance shall be determined by job site pull-out tests.

**Table C2: Point thermal transmittance according EOTA Technical Report TR 025:2016-05**

| Anchor type | Insulation thickness $h_d$ [mm] | Point thermal transmittance $\chi$ [W/K] |
|---|---|---|
| TFIX-8M | 50 - 270 | 0,002 |

**Table C3: Plate stiffness according EOTA TR 026:2016-05**

| Anchor type | Diameter of the anchor plate [mm] | Load resistance of the anchor plate [kN] | Plate stiffness [kN/mm] |
|---|---|---|---|
| TFIX-8M | 60 | 1,75 | 1,0 |

**Table C4: Displacements**

| Anchor type | Bulk density $\rho$ [kg/dm³] | Minimum compressive strength $f_b$ [N/mm²] | Tension load N [kN] | Displacements $\Delta\ \delta_N$ [mm] |
|---|---|---|---|---|
| Concrete C12/15 - C50/60 (EN 206:2013+A1:2016) | | | 0,40 | 0,5 |
| Clay brick, Mz (EN 771-1:2011+A1:2015) | ≥ 2,0 | 12 | 0,40 | 0,7 |
| Sand-lime solid bricks (calcium silikate), KS (EN 771-2:2011+A1:2015) | ≥ 1,8 | 12 | 0,40 | 0,8 |
| Sand-lime solid bricks (calcium silikate), KSL (EN 771-2:2011+A1:2015) | ≥ 1,4 | 12 | 0,30 | 0,4 |
| Perforated clay bricks, HLz (EN 771-1:2011+A1:2015) | ≥ 1,0 | 12 | 0,20 | 0,6 |
| Lightweight concrete solid block, Vbl (EN 771-3:2011+A1:2015) | ≥ 0,7 | 4 | 0,10 | 0,2 |
| Lightweight concrete hollow block, Hbl (EN 771-3:2011+A1:2015) | ≥ 0,9 | 2 | 0,15 | 0,3 |
| Lightweight concrete solid brick, V (EN 771-3:2011+A1:2015) | ≥ 1,2 | 6 | 0,15 | 0,3 |

**Insulation support TFIX-8M**

**Performances**
Point thermal transmittance, plate stiffness and displacements

**Annex C 2**